S/M No. : FRST20DA00

DAEWOO ELECTRONICS

〈Service Manual〉

Side by Side Refrigerator

MODEL : FRS-T20FA*
FRS-T20DA*

Caution :

In this Manual, some parts can be changed for improving, their performance without notice in the parts list. So, if you need the latest parts information,please refer to PPL(Parts Price List) in Service Information Center (http://svc.dwe.co.kr).

DAEWOO ELECTRONICS Corp.

http : //svc.dwe.co.kr

CONTENTS

- EXTERNAL VIEW -

- SPECIFICATION -

- OPERATION AND FUNCTION -

- DIAGRAM -

- INSTALLATION GUIDE -

- EXPLODED VIEW-

SAFETY AND PRECAUTION

1) For starters, be sure to check any chances of the leakage of electricity
2) You could handle a part in the vicinity of electricity after unplugging
3) You should put on rubber glovers to prevent an electric shock on operation test
4) Make sure the rated current, voltage, capacity before using an instrument
5) Keep your wet hands away from the metal goods in the freezer compartment not to be frostbitten
6) Be careful not to let water to permeate the electric part in the machine room

1. EXTERNAL SIZE

■ FRS-T20DA*

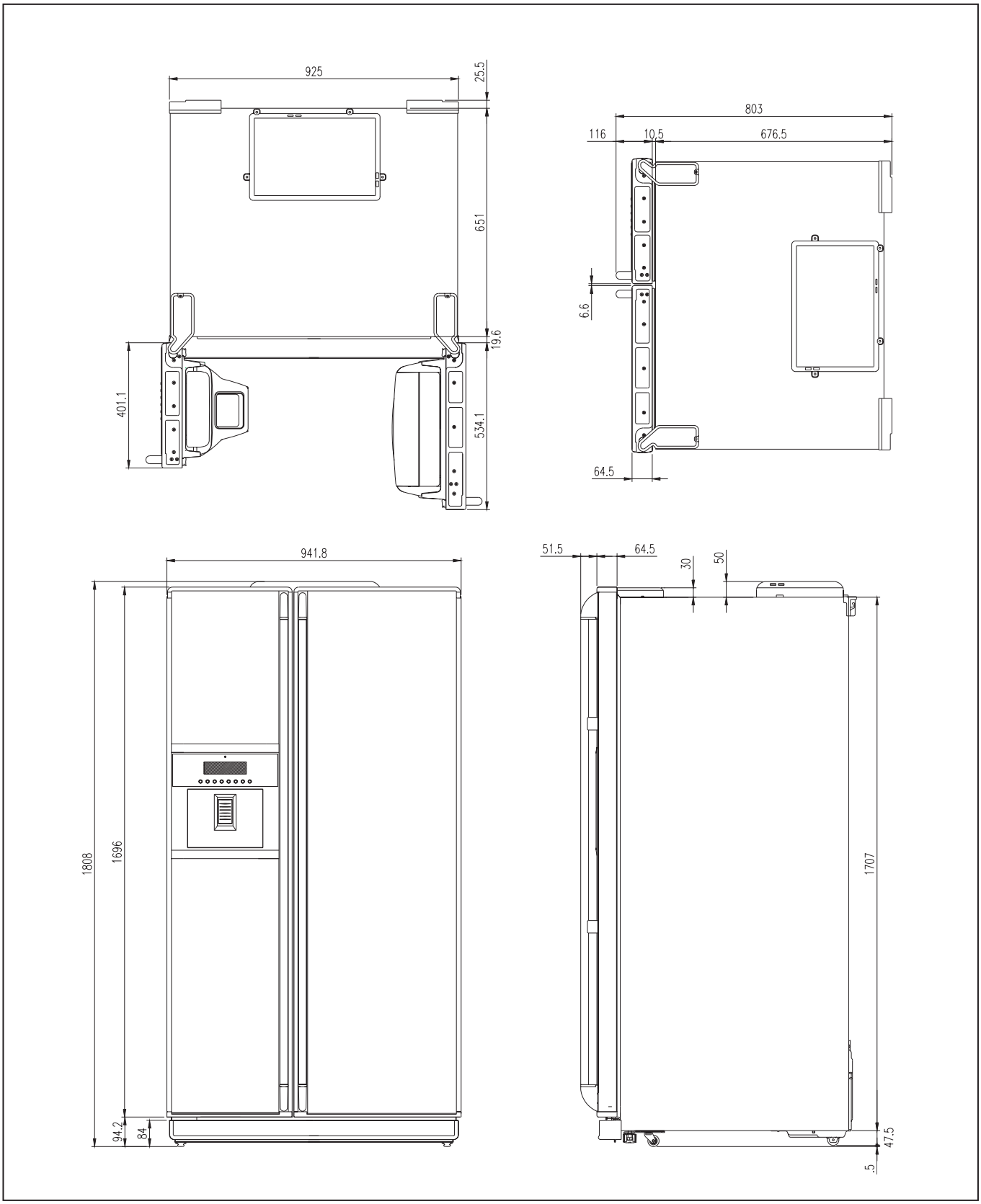

■ FRS-T20FA*

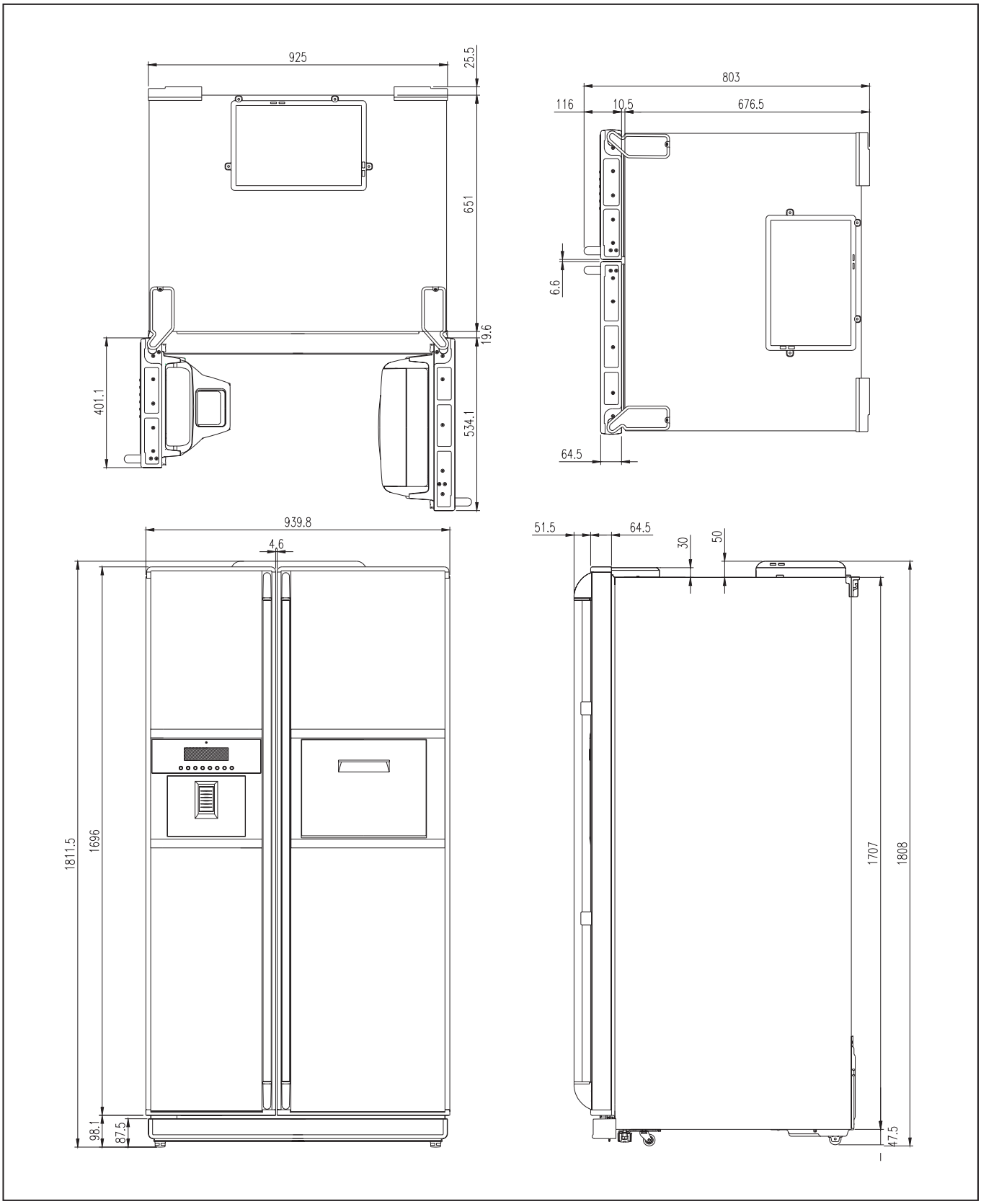
925
25.5
651
19.6
401.1
534.1
803
116
10.5
676.5
6.6
64.5
939.8
4.6
1811.5
1696
98.1
87.5
51.5
64.5
30
50
1707
1808
47.5

2. Refrigeration Cycle

■ MSZ 70* NF (HB)

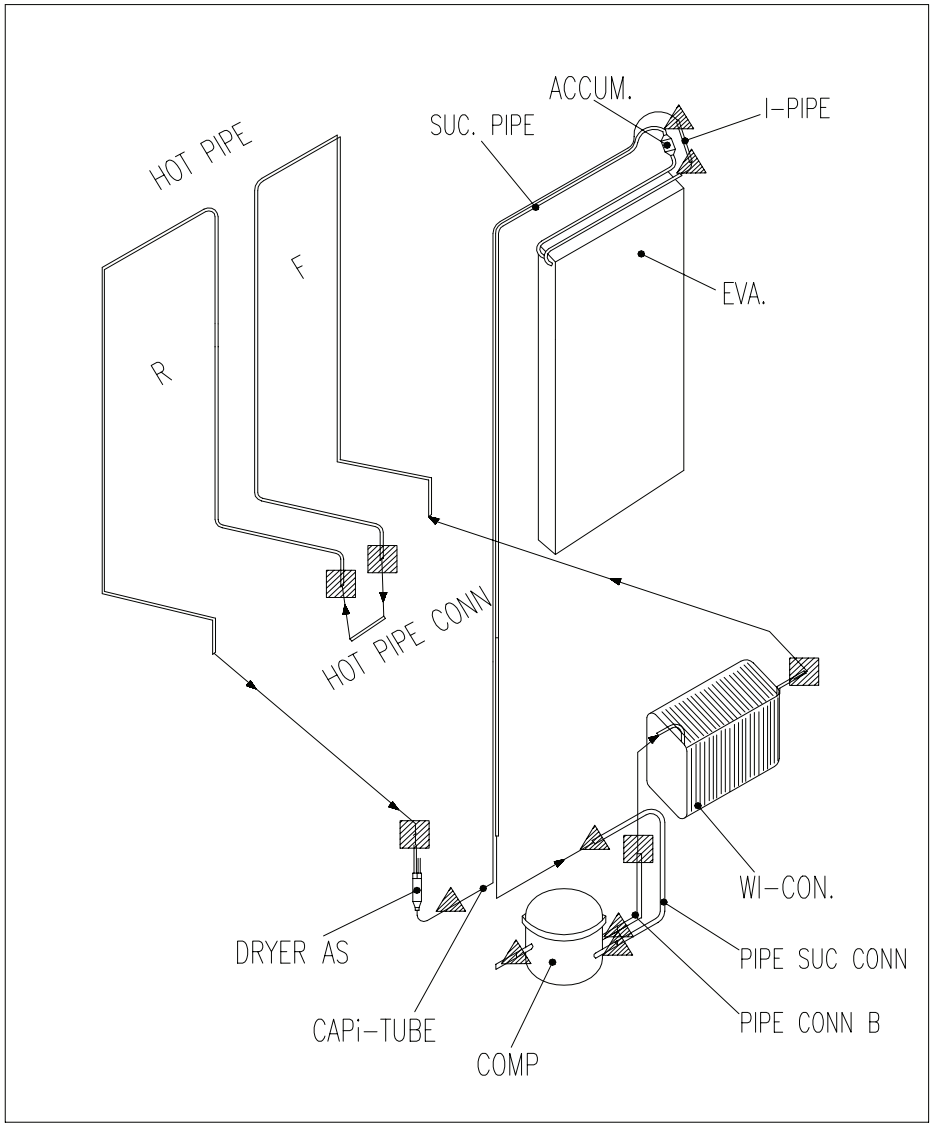

■ Welding Points

●	5%	7 points
■	35%	5 point

■ Flow of Refrigeration Cycle

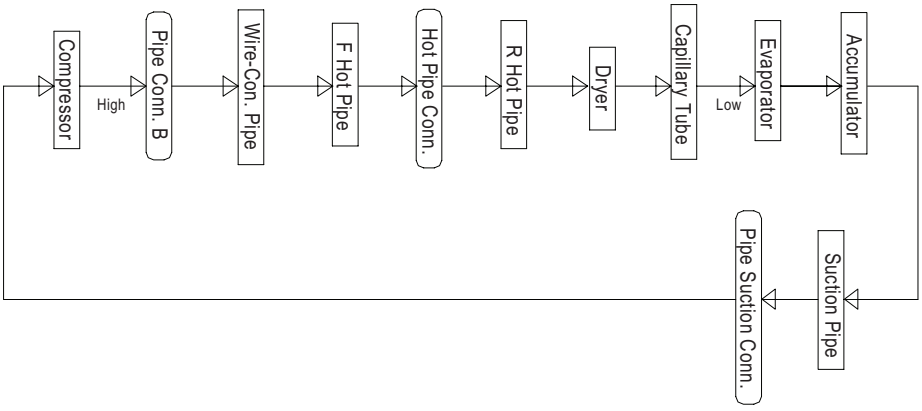

3. Cold Air Circulation

Freezer Compartment

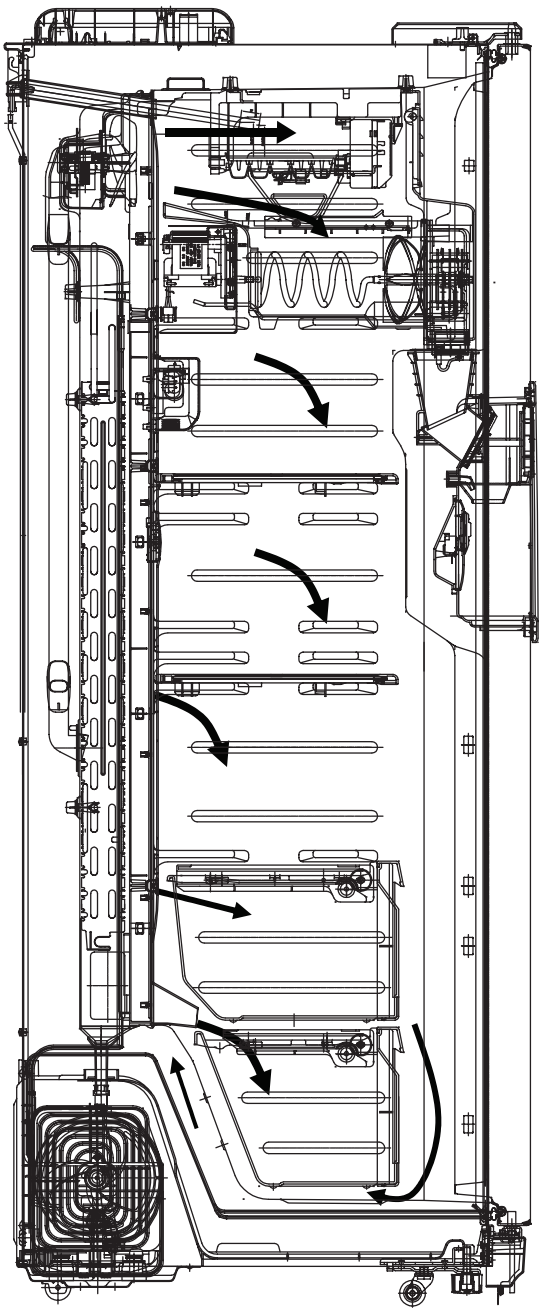

Refrigerator Compartment

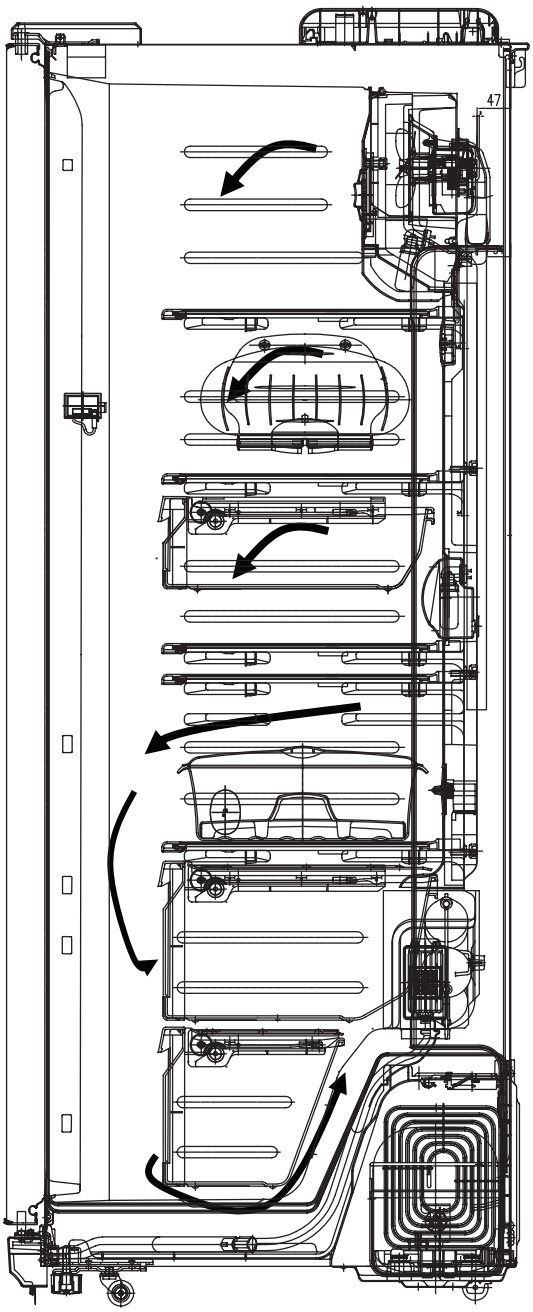

4. NAME OF EACH PART

■ FRS-T20DA*

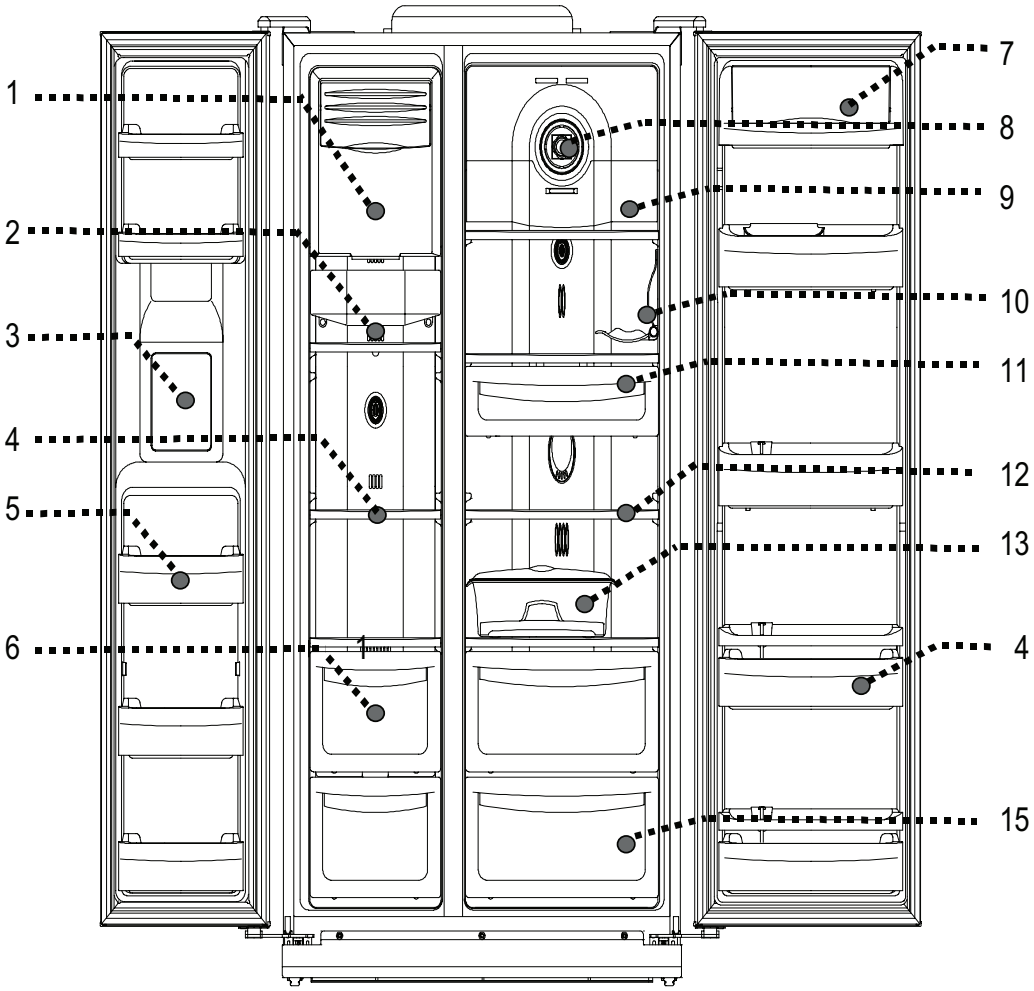

Freezer	Refrigerator Compartment
1. Ice cubes storage case	7. Dairy pocket
2. Freezer light	8. Deordorizer
3. Water/Ice Dispenser	9. Refrigerator light(A)
4. Freezer shelve	10. Wine holder
5. Freezer pocket	11. Chilled case
6. Freezer case	12. Refrigerator shelve
	13. Movable Egg case
	14. Refrigerator pocket
	15. Refrigerator case

■ FRS-T20FA*

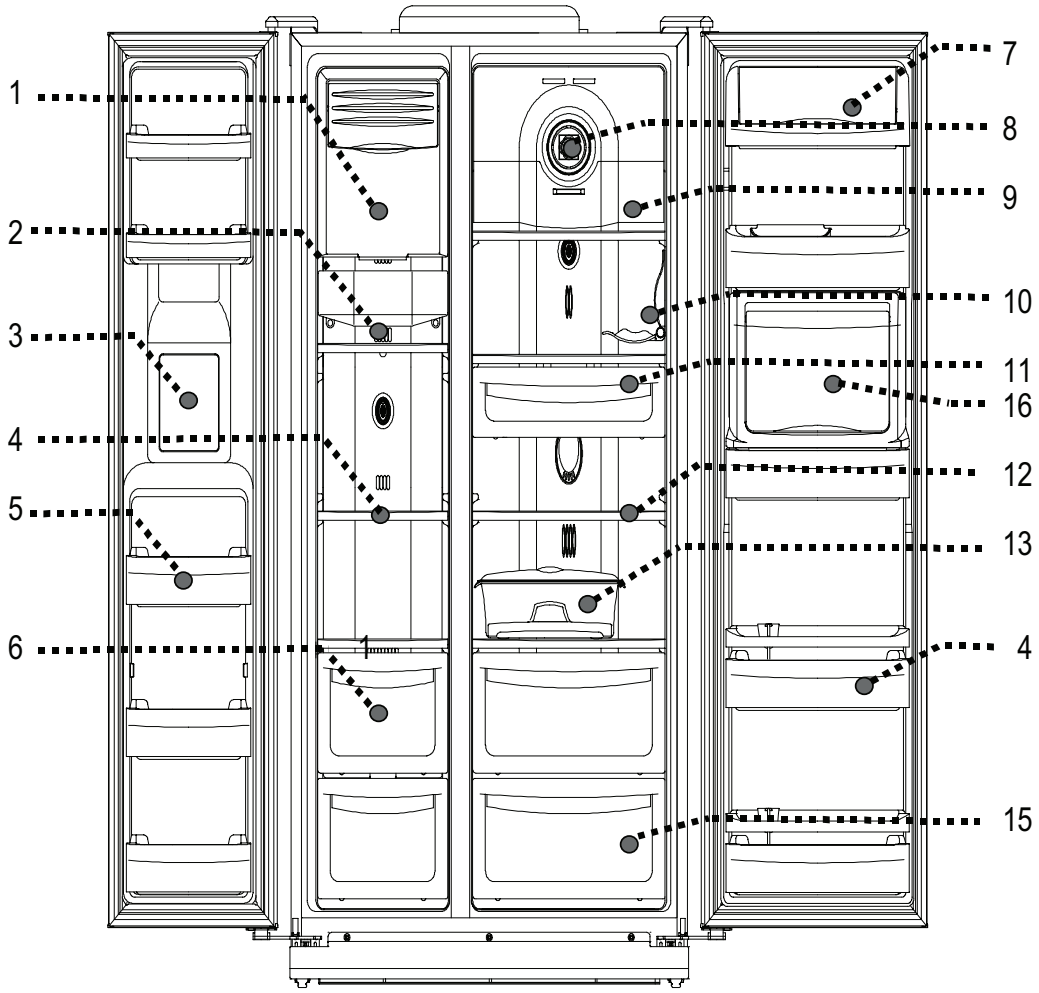

Freezer	Refrigerator Compartment
1. Ice cubes storage case	7. Dairy pocket
2. Freezer light	8. Deordorizer
3. Water/Ice Dispenser	9. Refrigerator light(A)
4. Freezer shelve	10. Wine holder
5. Freezer pocket	11. Chilled case
6. Freezer case	12. Refrigerator shelve
	13. Movable Egg case
	14. Refrigerator pocket
	15. Refrigerator case
	16. Refreshment room(Pocket)

1. SPECIFICATIONS

DIVISION		CONTENTS	
MODEL NAME		FRS-T20DA*	FRS-T20FA*
ISO Gross Volume (L)	FREEZER	191	
	REFRIGERATOR	365	
	TOTAL	556	
ISO Storage Volume (L)	FREEZER	174	
	REFRIGERATOR	339	
	TOTAL	513	
EXTERNAL DIMENSION (mm)	WIDTH	928	
	DEPTH	803	
	HEIGHT	1808	
REFRIGENT	R134a	190	
COOLING & CONTROL SYSTEM	COOLING SYSTEM	Fan Cooling System	
	DEFROST SYSTEM	Fin Evaporator Forced	
	DEFORST CONTROL	Automatic Start & Stop	
NET WEIGHT (kg)		127	129

2. ELECTRIC PARTS

1) COMPRESSOR

REFRIGERANT	R134a						
VOLTAGE (V/HZ)	100 /50,60	110 / 60	115,120/60	127/60	220 / 60	220 ~240/50	230 /50 (EUROP)
COMP MODEL	X	HBL27YG-3	X	HCL27YG-2	HPL27YG-4A	HPL30YG-5	MK183Q-L2U
PART CODE	X	3952127R30	X	3957127R20	3956127R40	395S130R50	3956183D50
STARTING TYPE	X	CSR	X	CSIR	RSCR	RSCR	RSCR

2) RELAY

REFRIGERANT		R134a						
VOLTAGE (V/HZ)		100 /50,60	110 / 60	115,120/60	127/60	220 / 60	220~240 / 50	230 / 50
ASSY	TYPE NAME	X	783SHB	X	801SFB	419RHB	308NHB	265RHB
	PART CODE	X	3018119370	X	3018118180	3018118131	3018119980	3018125210
PTC	RESISTANCE	X	6.8 Ω	X	6.8 Ω	33 Ω	33 Ω	33 Ω
OVER LOAD	PART CODE	X	783SHB	X	801SFB	419RHB	308NHB	265RHB

3) STARTING CAPACITOR

REFRIGERANT	R134a						
VOLTAGE (V/HZ)	100 /50,60	110 / 60	115,120/60	127/60	220 / 60	220~240 / 50	230 / 50
PART CODE	X	3016400100	X	3016400100	X	X	X
RATED VOLTAGE	X	200V	X	200V	X	X	X
RATED CAPACITANCE	X	100 μF	X	100 μF	X	X	X

4) RUNNING CAPACITOR

REFRIGERANT	R134a						
VOLTAGE (V/HZ)	100 /50,60	110 / 60	115,120/60	127/60	220 / 60	220~240 / 50	230 / 50
PART CODE	X	400EL15130	X	X	3016401170	3016401920	3016401170
RATED VOLTAGE	X	230V	X	X	350V	400V	350V
RATED CAPACITANCE	X	10 §	X	X	5 §	5 §	5§

5) F-FAN MOTOR

REFRIGERANT	R134a						
VOLTAGE (V/HZ)	100 /50,60	110 / 60	115,120/60	127/60	220/60	220~240 / 50	230 / 50
TYPE NAME	BL-2213DWFA-1						
PART CODE	3015911300						
REVOLUTION	DC 12V 2200RPM						

6) R-FAN MOTOR

REFRIGERANT	R134a						
VOLTAGE (V/HZ)	100 /50,60	110 / 60	115,120/60	127/60	220/60	220~240 / 50	230 / 50
TYPE NAME	BL-2213DWRA-1						
PART CODE	3015911400						
REVOLUTION	DC 12V 2200RPM						

7) C- FAN MOTOR

REFRIGERANT	R134a						
VOLTAGE (V/HZ)	100 /50,60	110 / 60	115,120/60	127/60	220/60	220~240 / 50	230 / 50
TYPE NAME	BL-2213DWCA-2						
PART CODE	3015911500						
REVOLUTION	DC 12V 2200RPM						

8) DEFROST HEATER

REFRIGERANT	R134a						
VOLTAGE (V/HZ)	100 /50,60	110 / 60	115,120/60	127/60	220/60	220~240 / 50	230 / 50
SPEC (W)	X	140W	←	←	140W	←	←
PART CODE	X	3012811210	←	←	3012811200	←	←

9) DRAIN HEATER

REFRIGERANT	R134a						
VOLTAGE (V/HZ)	100 /50,60	110 / 60	115,120/60	127/60	220/60	220~240 / 50	230 / 50
SPEC (W)	X	110V 10W	←	←	220V 10W	←	←
PART CODE	X	3012811110	←	←	3012811100	←	←

10) LAMP ASSEMBLY

REFRIGERANT	R134a						
VOLTAGE (V/HZ)	100 /50,60	110 / 60	115,120/60	127/60	220/60	220~240 / 50	230 / 50
SPEC (W)	X	120V 15W	←	←	240V 15W	←	←
PART CODE	X	3013600070	←	←	3013600060	←	←
SPEC (W)	X	120V 25W	←	←	230~240V 25W	←	←
PART CODE	X	3013602020	←	←	3013602010	←	←

11) MAIN PCB ASSEMBLY

REFRIGERANT	R134a						
VOLTAGE (V/HZ)	100 /50,60	110 / 60	115,120/60	127/60	220/60	220~240 / 50	230 / 50
TYPE NAME	X	SBS 2ND PREMIUM	←	←	←	←	←
PART CODE	X	30143D2060	←	←	←	←	30143D2070

12) FUSE (PCB)

REFRIGERANT	R134a						
VOLTAGE (V/HZ)	100 /50,60	110 / 60	115,120/60	127/60	220/60	220~240 / 50	230 / 50
RATED CURRENT	X	250V/3.15A	←	←	←	←	←
PART CODE	X	5F3GB3282R	←	←	←	←	←

13) THERMOSTAT FUSE

REFRIGERANT	R134a						
VOLTAGE (V/HZ)	100 /50,60	110 / 60	115,120/60	127/60	220/60	220~240 / 50	230 / 50
OPERATING TEMPERATURE	x	77 ℃	←	←	←	←	←
PART CODE	x	30127201400	←	←	←	←	←

14) MOTOR GEARED AS

REFRIGERANT	R134a						
VOLTAGE (V/HZ)	100 /50,60	110 / 60	115,120/60	127/60	220/60	220~240 / 50	230 / 50
SPEC	x	120V/60Hz	←	←	220V/60Hz	230V/50Hz	←
PART CODE	x	3015914000	←	←	3015912800	3015913900	←

15) VALVE SOLENOID DISPENSER

REFRIGERANT	R134a						
VOLTAGE (V/HZ)	100 /50,60	110 / 60	115,120/60	127/60	220/60	220~240 / 50	230 / 50
SPEC	x	110~115V/60Hz	←	127V/60Hz	220V/60Hz	230V/50Hz	←
PART CODE	x	3015403200	←	3015403100	3015402100	3015403000	←

16) VALVE SOLENOID CRUSHER

REFRIGERANT	R134a						
VOLTAGE (V/HZ)	100 /50,60	110 / 60	115,120/60	127/60	220/60	220~240 / 50	230 / 50
SPEC	x	110~127V 60Hz	←	←	220~240V 50,60Hz	←	←
PART CODE	x	3015402900	←	←	3015402000	←	←

17) VALVE WATER

REFRIGERANT	R134a						
VOLTAGE (V/HZ)	100 /50,60	110 / 60	115,120/60	127/60	220/60	220~240 / 50	230 / 50
SPEC	x	110~127V 60Hz	←	←	220~240V 50,60Hz	←	←
PART CODE	x	3015402800	←	←	3015402200	←	←

18) POWER CORD

NO	SHAPE OF POWER CORD	PART CODE	DESCRIPTION	REMARK
1		3011315000	CP-2PIN	For european country
2		401RA17200	CP-2PIN	For other country
3		4006D17101	KP-30	For America & El Salvador
4		401PD17101	KP-211	For Japan & Taiwan
5		3011300801	BP-3PIN	
6		3011303010	# 267	For Chile
7		3011315310		For Israel
8		3011303050	BS-1363A	For U.K, Middle Asia Singapore & Malaysia
9		3011301200	KP-551/550	For China & Australia

Upper power cord's part code is only lead wire, without any kinds of terminal or houisng

3. Door Color Code

1) Assembly Freezer Door

- FRS-T20FA* / FRS-T20DA* (100~120V)

Blowing Agent	Cyclo Pentane				
Color Type	NOBLESS SILVER	NEO WHITE	LUXURY MIRROR	CHERRY WOOD	THE OTHERS
Color Code	NAH4A	NHH4G	LMH4G	CWH4W	THE OTHERS
Part Code	300005434A	300005432A	300005430A	300005433A	300005431A

- FRS-T20FA* / FRS-T20DA* (127V/60Hz)

Blowing Agent	Cyclo Pentane				
Color Type	NOBLESS SILVER	NEO WHITE	LUXURY MIRROR	CHERRY WOOD	THE OTHERS
Color Code	NAH4A	NHH4G	LMH4G	CWH4W	THE OTHERS
Part Code	300005434B	300005432B	300005430B	300005433B	300005431B

- FRS-T20FA* / FRS-T20DA* (220V/60Hz)

Blowing Agent	Cyclo Pentane				
Color Type	NOBLESS SILVER	NEO WHITE	LUXURY MIRROR	CHERRY WOOD	THE OTHERS
Color Code	NAH4A	NHH4G	LMH4G	CWH4W	THE OTHERS
Part Code	300005434C	300005432C	300005430C	300005433C	300005431C

- FRS-T20FA* / FRS-T20DA* (220~240V/50Hz)

Blowing Agent	Cyclo Pentane				
Color Type	NOBLESS SILVER	NEO WHITE	LUXURY MIRROR	CHERRY WOOD	THE OTHERS
Color Code	NAH4A	NHH4G	LMH4G	CWH4W	THE OTHERS
Part Code	3000054340	3000054320	3000054300	3000054330	3000054310

2) Assembly Refrigerator Door

- FRS-T20FA* (100~127V)

Blowing Agent	Cyclo Pentane				
Color Type	NOBLESS SILVER	NEO WHITE	LUXURY MIRROR	CHERRY WOOD	THE OTHERS
Color Code	NAH4A	NHH4G	LMH4G	CWH4W	THE OTHERS
Part Code	300003944A	300003941A	300003942A	300003943A	300003940A

- FRS-T20FA* (200~240V)

Blowing Agent	Cyclo Pentane				
Color Type	NOBLESS SILVER	NEO WHITE	LUXURY MIRROR	CHERRY WOOD	THE OTHERS
Color Code	NAH4A	NHH4G	LMH4G	CWH4W	THE OTHERS
Part Code	3000039440	3000039410	3000039420	3000039430	3000039400

- FRS-T20DA*

Blowing Agent	Cyclo Pentane				
Color Type	NOBLESS SILVER	NEO WHITE	LUXURY MIRROR	CHERRY WOOD	THE OTHERS
Color Code	NAH4A	NHH4G	LMH4G	CWH4W	THE OTHERS
Part Code	3000039540	3000039510	3000039520	3000039530	3000039500

1. DISPLAY

INPUT	Control Object
Front PCB buttons FRZ SET. button REF SET. button SUPER FRZ. button SUPER REF. button WATER / ICE button LOCK Button / SLEEP button	LCD

CONTENTS

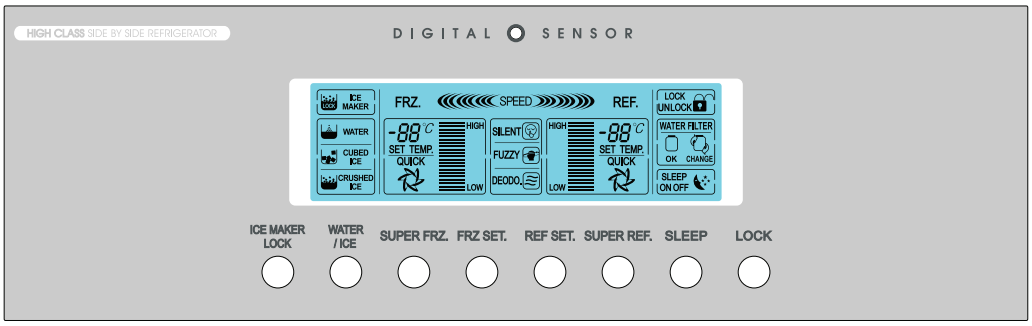

1. Normal Operation
   1) Temperature control of Freezer / Refrigerator
      (Initial mode : Freezer & Refrigerator Middle)
   2) Lock mode / Sleep mode / Ice maker Lock : OFF
   3) SPEED icon : inactive
   4) FUZZY & DEODORIZER letters and icons : always ON
   5) Water / Cube Ice / Crushed Ice
      (Initial mode : Water)
   6) Other display modes

CUSTOM LCD	Normal Operation		Silent Mode		Sleep Mode
	Normal Mode	Load Mode		Silence Mode	
Freezer / Refrigerator BAR	DIAL	DIAL	DIAL	DIAL	DIAL
Temp. SEG.	DIAL	DIAL	DIAL	DIAL	DIAL
1) Letters of [FRZ., REF., LOW, HIGH, SET TEMP, FUZZY, DEODO., SILENT, SLEEP, WATER] 2) Icons of [FUZZY, DEODO., SLEEP, Water] 3) Temp. bars and lines	ON	ON	ON	ON	ON
SILENT icon	OFF	OFF	ON	ON	OFF
SPEED letters	OFF	ON	ON	OFF	OFF
SPEED bars	OFF	ON (progressive)	ON (progressive)	OFF	OFF
LOCK ON/OFF, SLEEP ON/OFF	DIAL	DIAL	DIAL	DIAL	DIAL
Water / Cube Ice / Crushed Ice	DIAL	DIAL	DIAL	DIAL	DIAL

CONTENTS	REMARK
2. "FRZ SET." button Temperature control of Freezer compartment 5 steps of sequential temperature mode Initial mode by power input : "MID" (Temperature and bars are shown.) * Letters are not indicated at Soft-Mid and Mid-Strong modes. (Just Setting temperatures and bars are shown.) Temperature progress : Low → (Low-Mid) → Mid → (Mid-High) → HIgh Temp. indication : -15℃ -17℃ -19℃ -21℃ -25℃ 3. "SUPER FRZ." button When this mode is chosen, "QUICK" icon and letters of freezer flicker 6 times and ON. (The set temperature and bars are still the previous value.) 4. "REF. SET" button Temperature control of Refrigerator compartment 5 steps of sequential temperature mode Initial mode by power input : "MID" (Temperature and bars are shown.) Letters are not indicated at Soft-Mid and Mid-Strong modes. (Just temperatures and bars are shown.) Temperature progress : Low → (Low-Mid) → Mid → (Mid-High) → HIgh Temp. indication : 4℃ 3℃ 2℃ 1℃ 0℃ 5. "SUPER REF." button When this mode is chosen, "QUICK" icon and letters of refrigerator flicker 6 times and ON. (The set temperature and bars are still the previous value.) 6. "SLEEP" button Start by pushing the button ("ON" lights.) Stop by pushing button again ("OFF" lights.) Automaticcally terminated after maximum 12 hours ("OFF" lights.) 7. Water/Ice button Select Water mode or Ice mode. A rectangle Line around the icon lights up to indicate your selection is on. Initial mode by power input: "Water"mode. Progress: Water → Cube Ice → Crushed Ice → Water 8. "LOCK" button Start by pushing the button ("LOCK" letters and icon light.) * No other buttons and modes, buzzer sound are controllable. Stop by pushing button again for a second ("OFF" and icon light.) * Except "Lock"button, other buttons are inactive during "Sleep"mode.	

CONTENTS	REMARK
9. "ICE MAKER LOCK" button Start by pushing "ICE MAKER LOCK"button ► "ICE MAKER LOCK" is "ON", ► The Icon & Box of "Cube Ice"/"Crushed Ice"disappear ► "Water"Icon & Box is always "ON" Stop by pushing "ICE MAKER LOCK"button again. ► "ICE MAKER LOCK" Icon is "OFF", ► The Icon & Box of "Cube Ice"/"Crushed Ice"is "OFF", ► "Water"Icon & Box is "ON". 10. Filter information The normal("OK" Icon) is on for 6 month after first power input. After six month, "CHANGE" Icon is on. How to reset Filter information. ► Push"LOCK" button and push the "ICE MAKER LOCK" button for 3 seconds.	

2. Temperature Control of Freezer Compartment (FC)

INPUT	Control Object
1. FRZ. SET button 2. SUPER FRZ. button 3. F-sensor	1. COMP 2. F-FAN

CONTENTS	REMARKS

1. Temperature modes change by pushing the button.

Low → Low-Mid → Mid → Mid-High → High

2. Comp. and F-fan are controlled by ON / OFF point of each mode.

3. Freezer Compartment [ON / OFF] DIFF : 2℃
(Freezer middle OFF point : -20.0℃)
(If RT ≤13℃, F-S OFF point is 2℃ UP. Freezer Middle OFF point : -18℃)

4. Freezer Compartment [Low → (Low-Mid) → Mid →(Mid-High)] DIFF : 2 degrees respectively
*([(Mid-HIgh) →High] DIFF : 4 degrees)

5. Control point of each mode

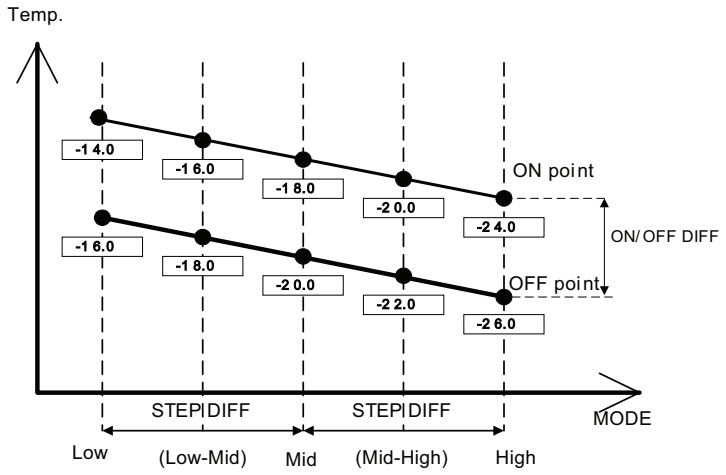

CONTENTS	REMARKS
6. SUPER FRZ. (Quick Freezing) 1) Comp. and F-fan are ON (about 150 minutes) regardless of F-sensor. 2) F-fan runs at 14V for the first 90 min., then at 12V for the rest time. 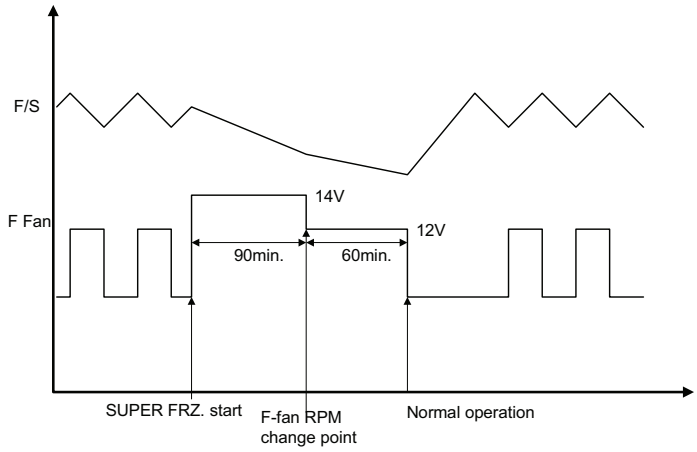 	* ON/OFF DIFF. : fixed by MICOM * STEP DIFF. : fixed by MICOM * Comp. and C-fan : linked

3. Temperature Control of Refrigerator Compartment (RC)

INPUT	Control Object
1. REF. SET button 2. R-sensor	1. COMP 2. R-FAN

CONTENTS	REMARKS
1. Temperature modes change by pushing the button. Low → Low -Mid → Mid → Mid-High → High 2. R-fan are controlled by ON / OFF point of each mode. 3. Refrigerator Compartment [ON / OFF] DIFF : 0.5℃ (Refreigerator Compartment middle OFF point : 0.7C°) (If RT≤13℃, R-S OFF point is 2℃ UP. Refrigerator Middle OFF point : 2.7℃) 4. Refrigerator Compartment [Low→(Low-Mid)→ Mid →(Mid-High)] DIFF : 1 degree respectively 5. Prevention of weak/poor-refrigeration 1) When weak refrigeration is sensed, comp. is ON regardless of F-sensor. 2) When R-sensor reaches R-fan OFF point, comp. is controlled by F-sensor and R-fan turns OFF. 3) Sensing point of weak refrigeration : R-sensor OFF point of each mode + 7℃ 4) Termination point : Same as R-sensor OFF point of each mode	* ON/OFF Diff. : fixed by MICOM * STEP DIFF. : fixed by MICOM

CONTENTS	REMARKS
6. Control point of each mode	

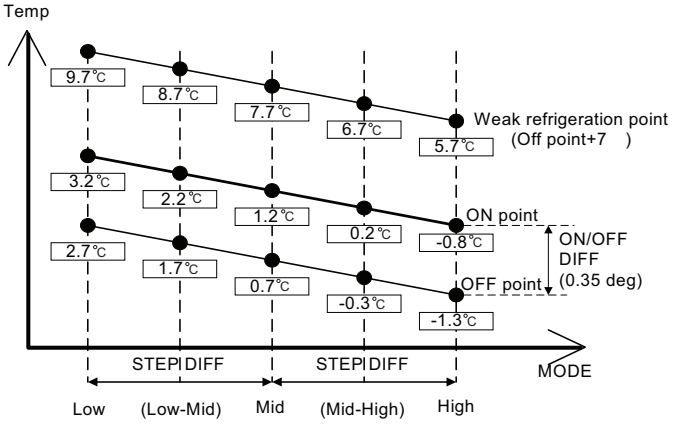

7. Super refrigeration proceeds for 40 minutes.
 * Example of temperature change
 (Refrigerator ; Low (normal) -> Super refrigeration)

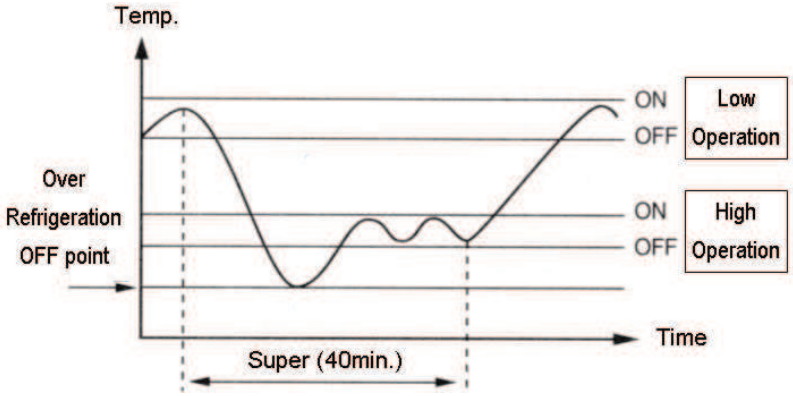

1) R-fan and comp. are ON until R-sensor reaches to over-refrigeration OFF point (-7℃).
2) After reaching to the point, it goes on with HIGH mode until the end of Super refrigeration.
 It returns to normal after Quick refrigeration of 40 minutes.

4. Sleep Mode

INPUT	Control Object
1. SLEEP button	1. COMP 2. R-FAN 3. F-FAN 4. CUSTOM-LCD

CONTENTS	REMARKS
1. This mode starts with a push of SLEEP button. 2. Conditions to start Sleep mode F-sensor = -13℃ Unless it is a restart within 40 minutes after the end of previous Sleep mode F-sensor error Door switch error Defrosting (Heater defrosting, pause, Fan delay) If the above conditions of ~ are all satisfied, the sleep mode starts. 3. Control of electrical parts 1) Mode 1 Once Sleep mode starts, all the electrical parts (COMP, F-FAN, R-FAN) turn OFF. ("ON" letters of SLEEP on LCD is display.) 2) Mode 2 It operates in Silent mode and "ON" letters of SLEEP on LCD is displayed on. 4. Termination of Sleep mode 1) MODE 1 F-sensor = -9℃ In case of F-sensor error When other button is pushed during this mode Total F/R door open time exceeds 30 seconds during the mode If Sleep mode is terminated by , and , F/R-fan delay for 5 minutes and restart of this mode is prevented for 40minutes. If it exceeds time limit of 130 minute, Mode1 is terminated and Mode2 starts. 2) MODE 2 Sleep mode is terminated 12 hours after the first start. (Speed mode and defrosting operate in normal way.) 5. After Sleep mode stops all the electrical parts return to normal operation and Sleep icon changes from "ON" to "OFF". 6. If Sleep mode starts during PRECOOL, it goes on again after the Sleep mode is terminated. 7. If Sleep mode starts during Super FRZ., Super REF., it returns to previous set mode after the Sleep mode is terminated.	

5. SILENT (Silence Mode)

INPUT	Control Object
1. CDS SENSOR	1. COMP 2. R-FAN 3. F-FAN 4. CUSTOM-LCD

CONTENTS	REMARKS

1. Purpose of Silence mode
   To reduce refrigerator noise at night by decresing fan RPM to a minimum degree

2. Condition to start
   The optical or light sensor in top middle of control panel senses surround light and Silence mode starts if the amount of light sensed is below the standard value for more than 1 minute.
   (The mode does not start for initial 240 minutes to prevent down of cooling performance.)
   - Standard value to decide "night" : below 5~7 Lux (optical sensor surface)
   - Standard value to decide "daytime" : above 4~16 Lux (optical sensor surface)

3. Control Method

Control Mode		F-FAN	R-FAN	C-FAN
Silence	Normal	10V	10V	10V
	Load Control	12V	12V	12V

4. Termination Condition
   The mode stops if lux value is above the standard for more than 1 minute.

6. Control of Each Mode

INPUT	Control Object
1. CDS SENSOR 2. R SENSOR 3. F SENSOR	1. F-FAN (14V, 12V, 10V)

CONTENTS	REMARKS

Control of Silence mode : operation mode when the optical sensor feels that it is night
Normal control : daytime operation mode
(Refrigerator noise is relatively low at daytime.)
Load control : operation mode when inside temperature goes up due to an increase of load (foods) or frequent door openings.

CONTENTS	REMARKS

1. Fan voltage of each control mode

Control Mode		F-FAN	R-FAN	C-FAN
Normal		12V	12V	10V
Load Control	Normal	14V	14V	
	Silence	12V	12V	
Silence	Normal	10V	10V	
Sleep Mode2	Normal	10V	10V	
	Load control	12V	12V	

2. Control against (under) load (Load Control)

1) Purpose : To restore F/R-temperature which has risen by load (much foods in or frequent door openings) as soon as possible

2) Display : "SPEED" lights until the mode and speed icons flicker.

3) Conditions to start (from both Normal and Silence)
F or R door open time exceeds 30 secon sdat a time Freezer and Refrigerator load control starts respectively .
Over [F-sensor On Point + 5 degree] → F load control
Over [R-sensor On Point + 5 degree] → R load control

4) Conditions to avoid load control
Initial operation (right after power input, Just after Pre-cool, Heater defrosting, Pause, Defrosting cycle.)
(After door opening, the load control enters if the condition complies with.)
(During Sleep Mode1, load control isn t active.)

5) Control Method
5-1) Control mode by F/R-door open time (over 30 seconds)
F/R-fan works by 14V respectively.
5-2) Control mode by [F-sensor On Point + 5 degree]
F-fan works by 14V.
5-3) Control mode by [R-sensor On Point + 5 degree]
R-fan works by 14V.
C-fan works by 10V as normal.

6) Conditions to stop
The mode works for 20 minutes.
(If another condition happens at the end of the mode, it starts again.)
When it reaches to [F-sensor Off point], F-fan load control mode stops.
When it reaches to [R-sensor Off point], R-fan load control mode stops.

CONTENTS	REMARKS
3. Control Time Chart of Each Mode 1) Start & stop of load control mode (Normal Control) 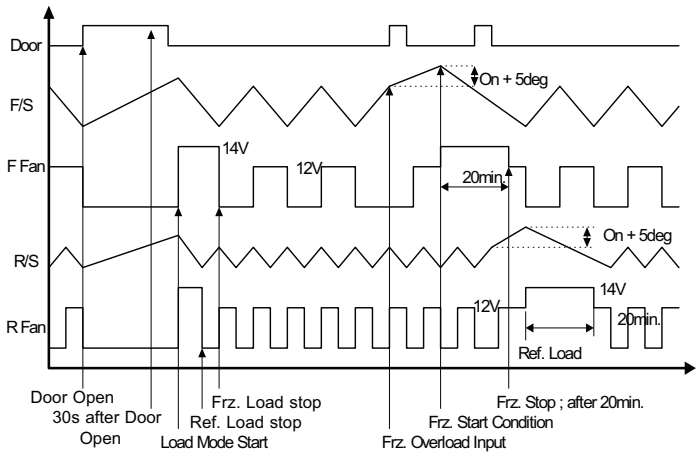 2) Start & stop of load control mode (Silence Control) 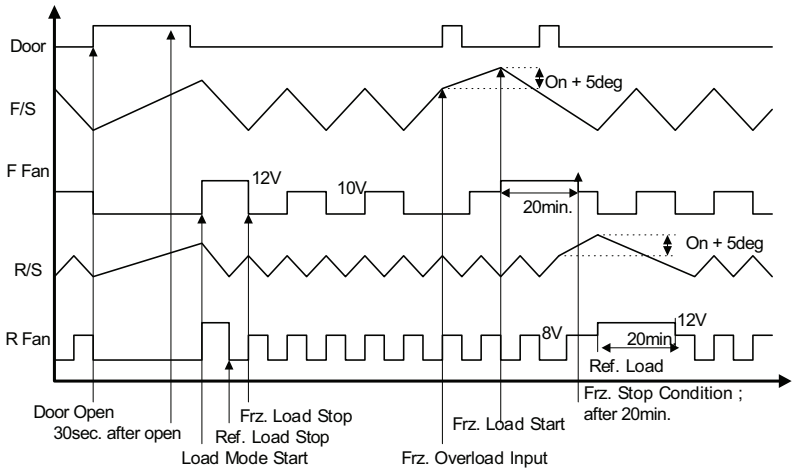 3) Start & stop of load control mode (Normal defrosting control) 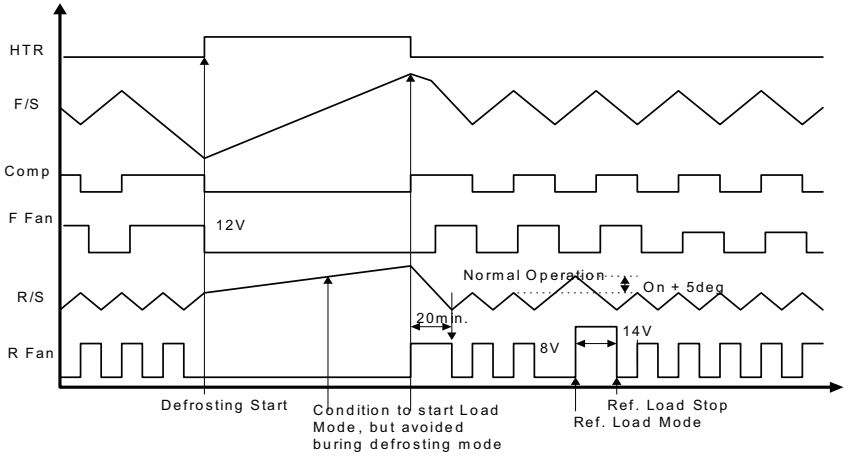 	

CONTENTS	REMARKS
4. Flow Chart of Load Control Mode	

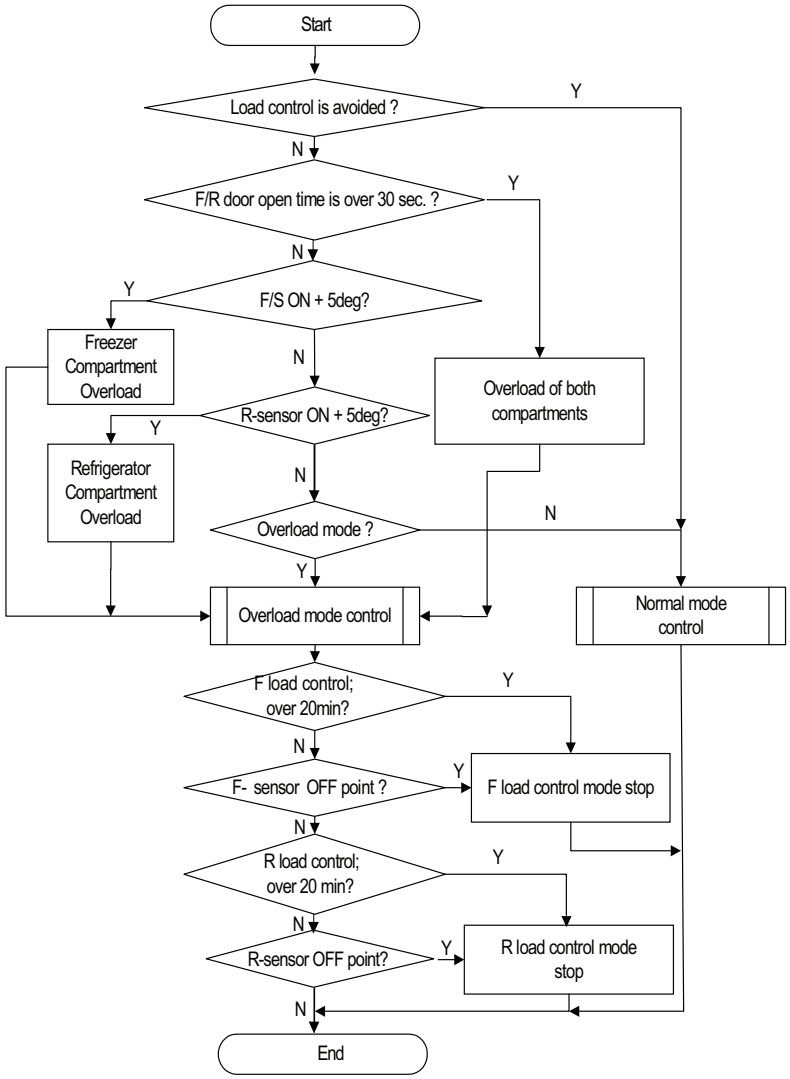

7. Defrosting Cycle

INPUT	Control Object
1. Total comp. work time 2. Comp. work rate 3. RT temperature 4. Total door open time	1. Defrosting Mode

CONTENTS	Remark
1. Conditions to start defrosting cycle 1) Total comp. work time : 6, 8, ... 24 hours. 2) Total door open time : 3 minutes (Any door - F or R - open time is over 3 minutes.) 3) Total time of [comp. ON + comp. OFF] : 60 hours 4) Any error mode : R1, F1, D1, F3, RT/S, Door-switch 2. Conditions to start defrosting mode 1) The mode starts with the following conditions ; ① Any error happens when total comp. work time is 6 or 8..... or 24hours. ② Total door open time is over 3 minutes. (Any door - F or R - open time is over 3 minutes.) 2) Defrosting mode starts unconditionally as long as total comp. work time is 24 hours, even if the above conditions(①~②) are not satisfied. 3) Defrosting mode starts immediately as long as total time of [comp. ON + comp. OFF] is over 60 hours, even if the above 1) and 2) conditions are not satisfied.	

CONTENTS	REMARKS
3. Flow Chart of Defrosting Start	

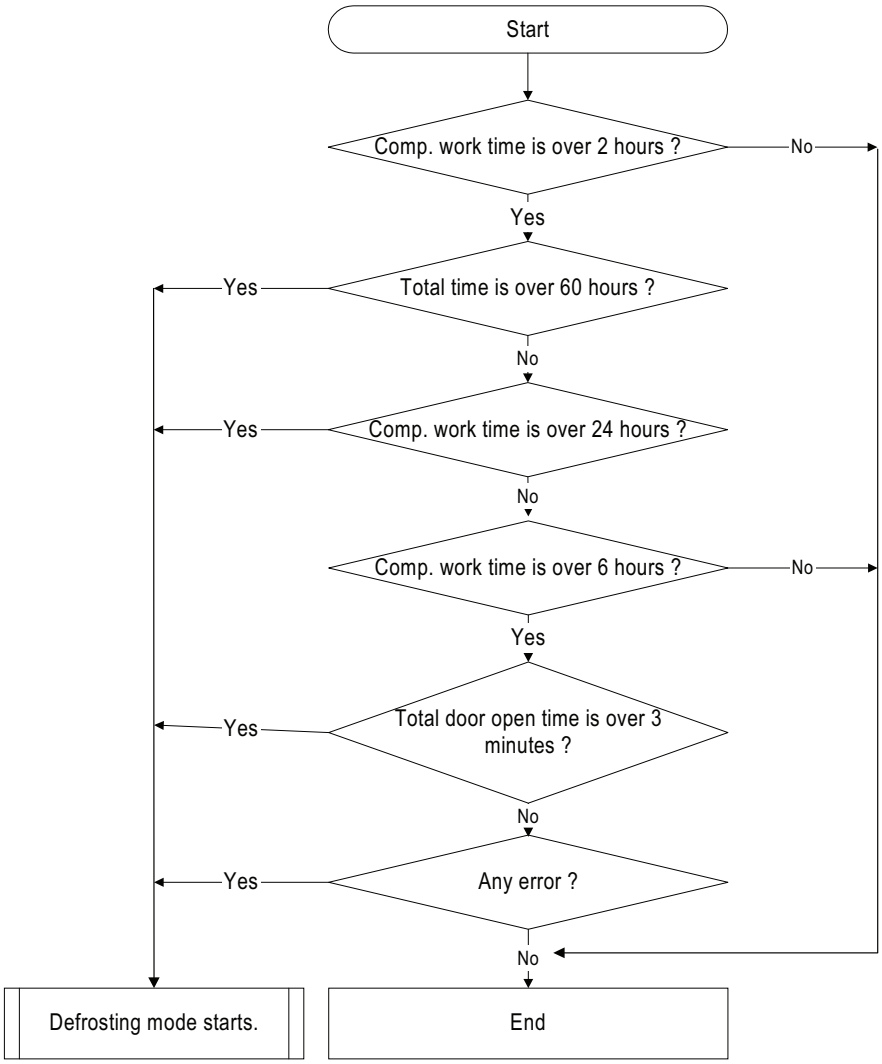

8. Defrosting Mode

INPUT	Control Object
1. Defrosting Cycle	1. COMP 2. F-FAN 3. R-FAN 4. HEATER

CONTENTS	REMARKS
1. Defrosting Mode	
Pre-Cool 1) Time ; 50 minutes 2) Comp. / F-fan : ON R-fan : Control Heater : OFF 3) If F-sensor ≤ - 27℃, then PRE-COOL becomes.OFF	
Heater Defrosting 1) Comp. /F-fan / R-fan : OFF HTR : ON 2) Time limit 30 seconds : Heater is ON regardless of D-sensor temperature right after defrosting start. 30 minutes : in case of D1-Error 80 minutes : in normal control state 3) If D-sensor ≥ 10 ℃ , Heater Defrosting is OFF	
Pause 1) Time : 7 minutes Comp./ F-fan / R-fan / Heater / Homebar HTR : OFF	
Fan Delay 1) Time : 5 minutes Comp. : ON F/R-fan, Heater : OFF	

9. Error Display (LCD Display of Front PCB)

INPUT	Control Object
1. Temperature Control Buttons	LCD

CONTENTS	REMARKS

1. How to start
   1) Press "crushed ice" button 5 times while pressing "water" button at the same time.
   2) Push "super freeze" button 5 times while pushing"freezer set" button at the same time.

2. Display
   Error code is displayed on LCD.

3. How to stop
   1) Push "reset water filter " button 1 time.
   2) It stops automatically in 4 minutes from the start.

4. All the error Codes are reset if they turn to be normal.

5. Error Code

ERROR CODE	CONTENTS
F1	F-sensor ; disconnection, short.
r1	R-sensor ; disconnection, short.
rt	RT-sensor ; disconnection, short.
d1	D-sensor ; disconnection, short.
dr	R-Door Switch ; defective
dF	F-Door Switch ; defective
dH	Homebar (Refreshment Center) Door Switch ; defective
C1	Cycle ; abnormal or defective.
F3	Return after defrosting ; abnormal or defective
E1	I senser ; defective
EF	F senser ; defective
Et	Horizontal switch ; error
E9	Water supply ; error
ES	Micro switch ; error
EA	Drop the ice while Et
Eu	Full ice switch ; error
Co	Display Full-Down mode
d2	Display forced defrost mode for A/S

CONTENTS	REMARKS

6. Control way of Errors (if any)

1) "F1" ERROR
Cause : F-sensor disconnection / short
Control : Condition of ambient temperature

RT/S	~7℃	~13℃	~19℃	~29℃	over 29℃
Work rate ON/OFF	14/ 50	16 / 41	27 / 45	26 / 22	35 / 20

If F-sensor is normal, the error is terminated automatically.

2) "r1" ERROR
Cause : R-sensor disconnection / short
Control : Condition of ambient temperature

RT/S	~7℃	~13℃	~19℃	~29℃	~39℃	over 39℃
Work rate ON/OFF	OFF	3 / 50	2 / 10	3 / 7	4 / 6	6 / 4

If R-sensor is normal, the error is terminated automatically

3) "rt" ERROR
Cause : RT-sensor disconnection / short (pull-down)
Control : Normal operation, deletion of control condition by RT-sensor
If RT-sensor is normal, the error is terminated automatically.

4) "d1" ERROR
Cause : D-sensor disconnection / short (pull-down)
Control : Time limit (30min.) of defrosting-return
If D-sensor is normal, the error is terminated automatically.

5) Door ERROR("dF","dR","dH" on display)
Cause : in case it senses that door is open for more than 1 hour.
Control : Deletion of function related door switch sensing
If door switch (open & close) is sensed, the error is terminated automatically.

6) "C1" ERROR
Cause : in case comp. works for over 3 hours when D-sensor temp. is over -5℃
Control : Normal operation
When D-sensor temp. is below -5℃ in comp. OFF, it is terminated.

7) "F3" ERROR
Cause : in case defrosting-return is done by time limit of 80min.
Control : Deletion of Pre-cool mode in defrosting mode
If defrosting-return is done by D-sensor, it is terminated.

8) "d2" MODE (A/S forced defrosting mode)
Push " fridge set " button 5 times while pushing "freezer set." button simultaneously.
Control : A/S forced defrosting control (Pre-cool is deleted.)
If D-sensor temp. is over 10℃, the mode is terminated automatically.

CONTENTS	REMARKS
9) "EI" ERROR Cause : I-SENSOR disconnection / short Control : After water suppy, Ice drop every 4.8hour. Termination : When I-SENSOR is normal. 10) "EF" Error Cause : When Flow-sensor is ERROR(There is no Pulse during some time.) The number of pulse signal is below 10 by 1 sec during water supply. Control : Control by time (By Vector time recorded EEPROM.) (Generally, Water is supplied about 5.5s.) Termination : Exchange Flow-Sensor 11) "E9" Error Cause : I-Sensor temp(5min after Water supply) doesn't go up. Control : Normal control Termination : Normal condition 12) "ES" Error (Micro S/W Error) Cause : When it senses 1min continuously Control : Stop Dispenser & Crusher function. Display : Relative LED is flicker. Termination : Normal condition 13) Malfunction of Ice Drop Motor Cause : Malfunction of Ice Drop Motor. [Check the Motor by pushing Test S/W.] Termination : Exchange Motor 14) "Eu" Error Cause : Switch(which senses if the ice is full or not) is in Error. Control : When dropping the Ice, the motor just rotates 90 degree. Termination : When the switch is in normal. 15) "EA" Error Cause : When sensing Ice dropping by time 3times in level sensor SW Error. Control :Stop of Ice Maker. Termination : With normal level switch. * Reinput of power or push of icemaker test switch. 16) "Et" ERROR Cause : Level switch error (No pulse is sensed for some time.) Control : By time. (Supply mode is skipped.) Te rmination : Normal condition. * When all ERROR CODE is normal, the Refrigerator reset.	

10. Forced Defrosting

INPUT	Control Object
1. "FRZ. SET" Button 2. "REF. SET." button 3. "LOCK" button	Defrosting Mode

CONTENTS	REMARKS
1. How to start Set "LOCK ON" first, then push "REF. SET" button 5 times while pushing "FRZ. SET" button simultaneously. 2. How to proceed 1) Delete Pre-cool mode. (Others are same as normal defrosting.) 2) Heater is ON regardless of D-sensor temp. at first 30 seconds. (Check of defrosting current)	

11. Initial Defrosting

INPUT	Control Object
D-sensor Initial or first power input (power plugin)	Defrosting Mode

CONTENTS	REMARKS
If D-sensor temp. ≤ 3.5℃ , defrosting mode starts from Pre-cool at first power input.	Comp. is delayed for 6 min. at the initial defrosting.

12. Buzzer or Alarm

INPUT	Control Object
F-PCB buttons Door Switch Initial Power Input	BUZZER

CONTENTS	REMARKS
1. Buzzer sounds if any button of F-PCB is pushed. 2. Buzzer sounds 4 times, 3 seconds after initial power input. 3. Buzzer sounds 3 times in case of A/S forced defrosting, 1 time in case of Pull Down operation. 4. If door is open, buzzer sounds every 1 minute for 5 minutes. (Door open alarm)	

13. LCD Background Light

INPUT	Control Object
F-PCB buttons Door Switch Initial Power Input	LCD BACK LIGHT

CONTENTS	REMARKS
1. Conditions to turn on LCD Light 1) Power input (plugin) 2) When any button on the panel is pushed, first the back light turns on, then button control is done. 3) When F/R door is open, the light turns on. 2. Conditions to turn off the light 1) The back light turns off 10 seconds after F/R door is closed 2) 1 minute after button control	

14. Explanation After Delivery

INPUT	Control Object
"FRZ. SET" button "REF. SET" button Power Cord	Electrical components and LCD

CONTENTS	REMARKS
1. Start Push "REFRIGERATOR SET." button for 3 seconds within 10 seconds just after power input. 2. Control 1) Electrical components are OFF for 3 hours. 2) Display operates in normal way.	

15. Prevention of Compressor Restart

INPUT	Control Object
None	Comp.

CONTENTS	REMARKS
Comp. does not start again for 6 minutes though F-sensor is ON.	6min. delay

16. Back Up Function

INPUT	Control Object
None	

CONTENTS	REMARKS
1. Filter Exchange Information : Record as a realtime from the point of Power Input. 2.P FACTOR (Information about Ice Maker)	

17. Delay Function of Electric Components

INPUT	Control Object
COMP ON/OFF	COMP F-FAN

CONTENTS	REMARKS
1) F-fan delay by comp. ON/OFF F-fan is ON/OFF 1 minute after comp. is ON/OFF. 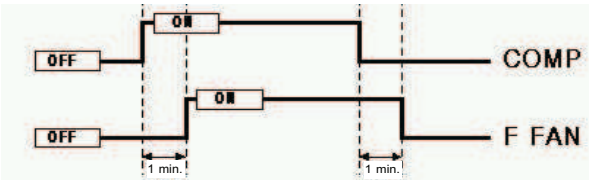 2) F an Delay and Priority 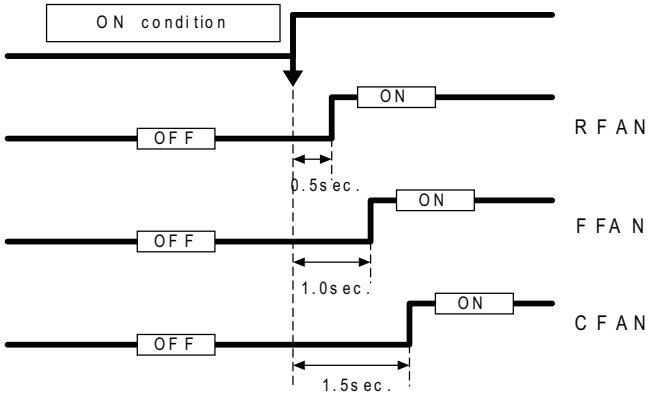 	

18. Home Bar (Home Bar Models Only) Heater

INPUT	Control Object
None	Comp.

CONTENTS	REMARKS
It is linked with comp.	

19. Control of Interior Lights

INPUT	Control Object
Refrigerator Door Freezer Door Home-Bar Door (Home Bar Models Only)	COMP

CONTENTS	REMARKS
1) Control of Refrigerator Compartment Lights R lights turn ON/OFF by R-door switch (ON/OFF). 10 minutes after sensing door open, the lights turn off automatically though door close is not sensed. 2) Control of Freezer Compartment Lights F lights turn ON/OFF by F-door switch (ON/OFF). 10 minutes after sensing door open, the lights turn off automatical yl though door close is not sensed. 3) R-lights ON/OFF by Home Bar(Home Bar Models Only) door opening R-lights turn ON for 1 minute after sensing HOME-BAR switch open. (If the switch is pushed again within 1 minute, the light turns on another 1 minute.) 4) DISPENSER LAMP CONTROL DISPENSER LAMP turns ON/OFF by DISPENSER SW. Dispenser Lamp turns ON for 5 seconds after sensing switch close.	

20. Demonstration Function

INPUT	Control Object
"LOCK" button "REFRIGERATOR SET." button "SLEEP" button	COMP F-FAN R-FAN

CONTENTS	REMARKS
1. Start 1) Set "LOCK ON" first. 2) Push "SLEEP" button 5 times while pushing "REF SET." button simultaneously. 2. Control 1) All other electrical components are OFF except for F-fan / R-fan. 2) Fan Control DOOR OPEN → FAN ON / DOOR CLOSE → FAN OFF 3) Display : Normal mode (3sec.) → SPEED(3sec.) → Super mode(3sec.) → Silent mode(3sec.) → Sleep mode (3sec.) 3. Stop or Termination 1) During Demo mode push "SLEEP" button 5 times while pushing "REF SET." button simultaneously. 2) Power in again.	

21. Regulation of R-sensor OFF Point

INPUT	Control Object
J1, J2 on Main PCB	Resistance of R-sensor Mid ON/OFF Point

CONTENTS	REMARKS
Regulation of R-sensor OFF point (1.5degree DOWN) In case refrigeration of refrigerator is weak or insufficient, take the following action.	

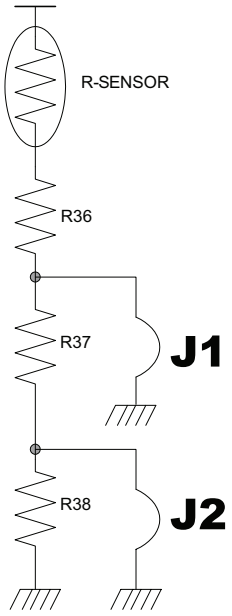

R36 : R-SENSOR standard resistance in normal mode (31.4K)
R37 : In case of weak ref., cut J1 to down the standard resistance by 1.5deg(2K)
R38 : In case of weak ref., cut J2 to down the standard resistance by 1.5deg(2K)

R36 = Mid ON/OFF point
R36 + R37 = Mid OFF point - 1.5 deg
R36 + R37 + R38 = Mid OFF point - 3.0 deg

22. Summary of Function

CONTENTS

How to start function modes
All the modes are started with "LOCK ON".

A/S forced defrosting	"FRZ SET." + "REF SET." 5 times.
Pull down Functions	"FRZ SET." + "REF SET." + "SLEEP" 5 times.
Explanation after delivery & installation	"REF SET." for 3 sec. Right after first power in.
ERROR display	"FRZ SET." + "SUPER FRZ." 5 times.
EERROM Clear	"SLEEP" + "LOCK" 5 times.
Reset water filter	"ICE MAKER LOCK" for 3 sec.
DEMO function	"REF SET." + "SLEEP" 5 times.

23. Automatic Ice Maker

Input	Control Object
Full ice sensing switch Ice Maker Lock Sensors	Ice separating motor

CONTENTS	REMARKS

1-1. Flow of ice making

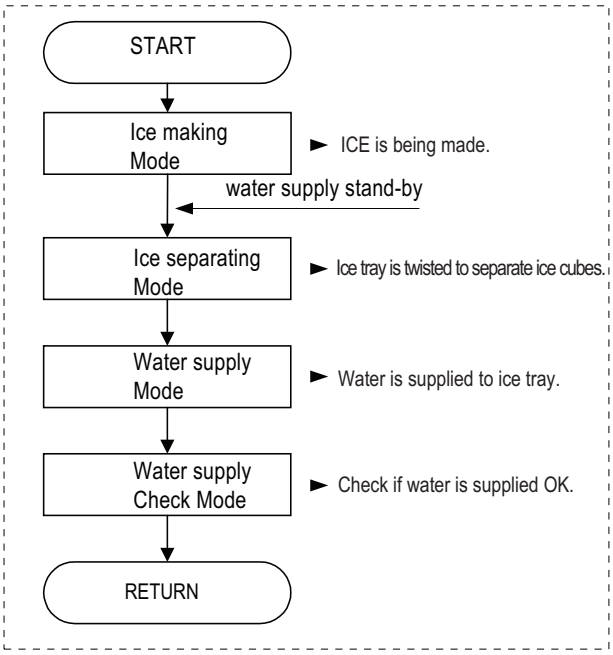

1) Press TEST switch of Icemaker for more than 1 second and test mode starts.
   * Test mode starts from ice separating mode.
   * In case test switch has an error of short, test is done only once.

2) With the initial power input, Ice tray turns to be horizontal and ice making mode starts.

3) Control of water hose heater
   * Heater is always ON if RT-sensor has an error or RT is below 15 degree.
   * Heater is always ON for 60 minutes (max. limit time) if Flow-sensor has an error.

4) Water supply stand-by
   Condition ; if ice is sensed full.
   Operation : proceeds to Ice making mode (Ice separating and water supply modes stop.)
   Termination ; if it is in normal condition.

5) Crusher Function
   It stops operation when freezer door is open.
   It operates if freezer door is closed.

CONTENTS	REMARKS

1-2. Ice Maker MODE

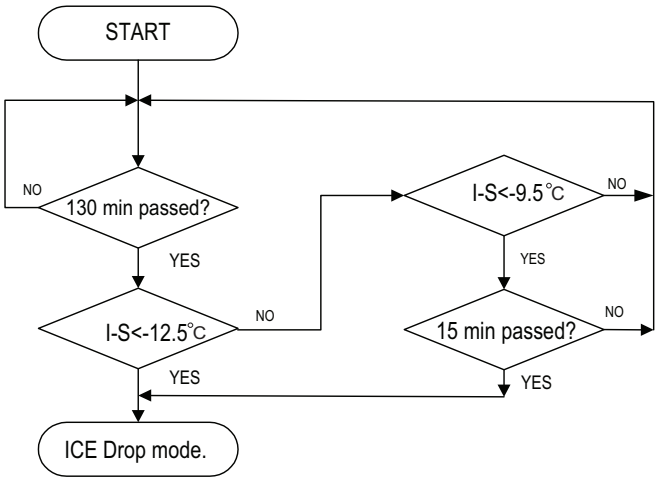

1) I-S is -12.5℃ and below after 130 min.=> Ice maker complete

2) Although I-S isn't -12.5℃ below for 130 min, I-S maintains -9.5℃ below continuously => Ice maker comlpete

3) I-Sensor Error: Ice Maker Complete after 4.8HR

2. Ice Drop MODE

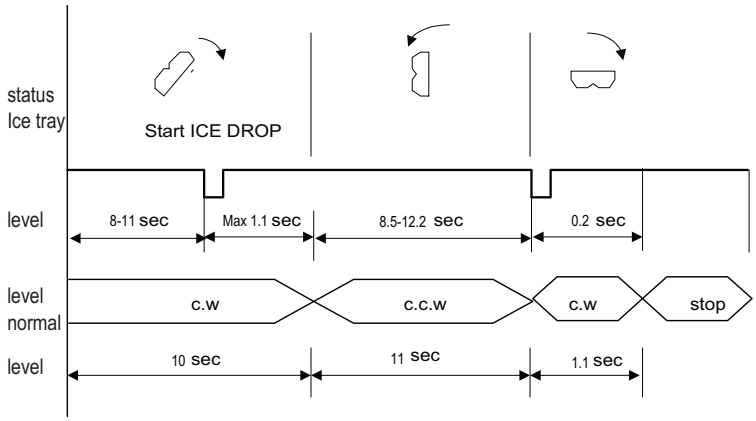

1) Each Section's Time used in S/W ERROR Confirm
2) Ice Drop MOTOR Rotation is Sensible by Each Sections
3) S/W ERROR: Ice Drop Every Time
4) Ice Drop MOTOR ERROR: Stop to the Status

CONTENTS	REMARKS

3. Water-Input MODE

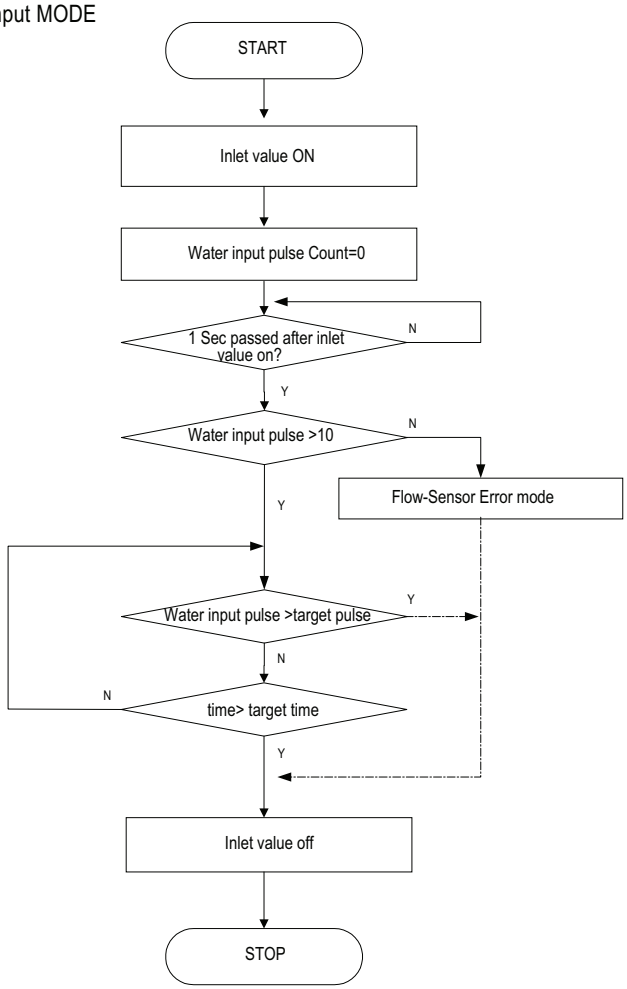

1) Convert of Water-Input Mode After Ice Drop:
   Water-Input Valve Open.
2) Flow Sensor Error: Water-Input is Controlled by Time
3) Veriable Factor Value : Using for A/S Steps
   ①Flow Sensor Normal Operation : Flow Pulse Value sets "238"
   (Water input by Time -: Maximum Water Inut Time => 15 sec.
   ②Flow Sensor error : Water input time => 5.5 sec.

4. Water-Input Confirm MODE
   I-S Temp. Rising Value with RT-S Temp. Mode after 5 min. : Estimate of Water Input

RT-S	7℃	~13℃	~19℃	~29℃	~39℃	39℃
I-S	-10℃	-9℃	-8℃	-7℃	-6℃	-5℃

24. Dispenser Control Function

Input	Control Object
Dispenser SW Water/Ice Button Lock Ice Maker Button Freezer Door SW	Dispenser Lamp Crusher Motor Flat Solenoid Crusher Solenoid Dispenser Water Valve

Contents	Remark
1) Water/Ice Selection Button * Initial Mode : Water Progress : Water → Ice Cube → Crushed Ice → Water * Pushing the dispenser value, water/Ice cube/crushed Ice is dispensed as your selection. 2) Lock Ice Maker Button Start by pushing "Lock Ice Maker" button " Lock Icer Maker" is "ON", The Icon & Box of "Cube Ice"/"Crushed Ice" disappear, "Water"Icon & Box is always "ON" Stop by pushing "Lock Ice Maker" button again. "Lock Icer Maker" Icon is "OFF", The Icon & Box of"Cube Ice"/"Crushed Ice"is "OFF", "Water"Icon & Box is "ON". 3) Display - Initial Mode : Water ICON & Letter is "ON". - A rectangle Line around the icon lights up to indicate your selection is on. - The Icon of water, Ice Cube, Crushed Ice is always " ON".(Exception, Dispenser S/W Error) - When pushing ' Lock Ice Maker': Lock Ice Maker is "ON" , The letters of crushed, cube Ice are "OFF" - There is no input during 1 hour, Dispeser transform into Water Mode.	

Contents	Remark
3) Control Flow & Timing Chart	' D.P ' = Dispenser

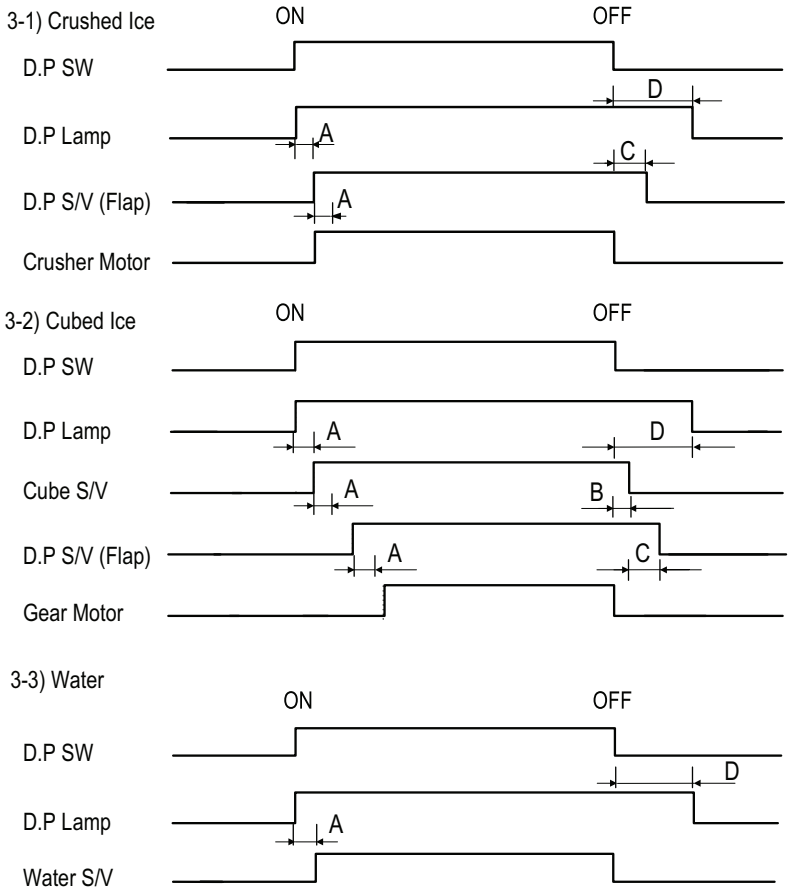

Delay Time : A = 500ms, B = 500Ms, C = 2.0s, D = 5.0s

1. WIRING DIAGRAM

< RSCR TYPE >

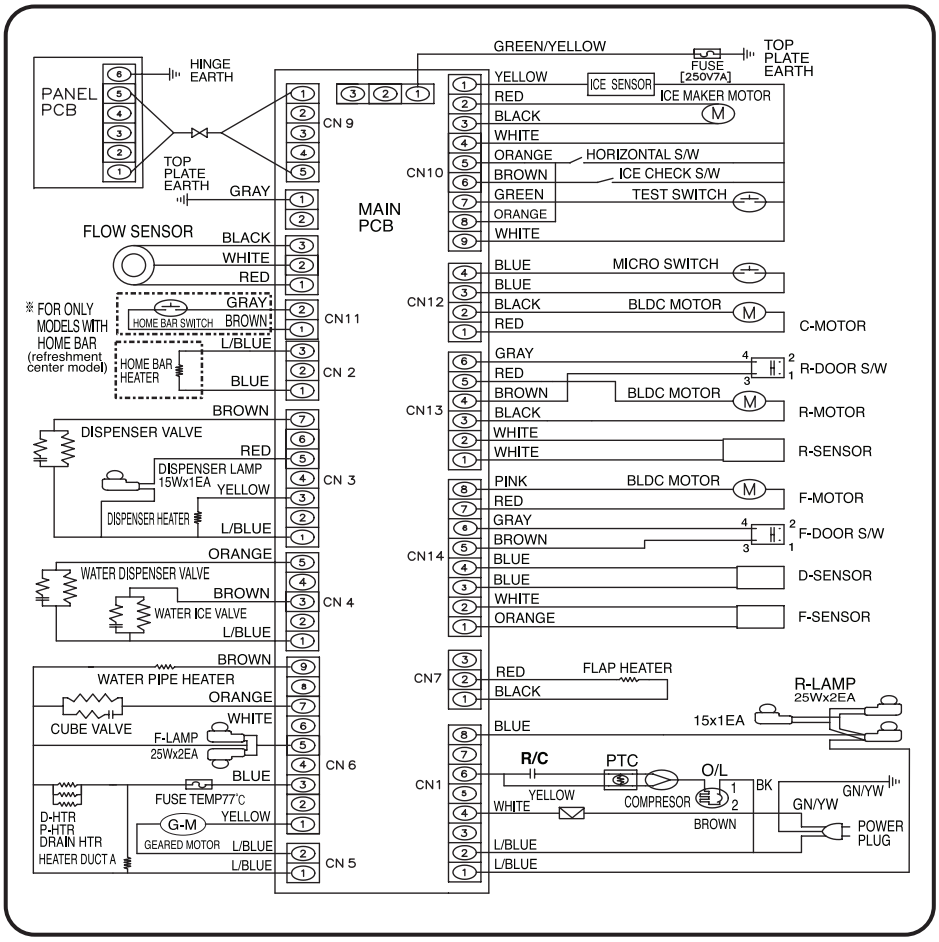

< CSR TYPE >

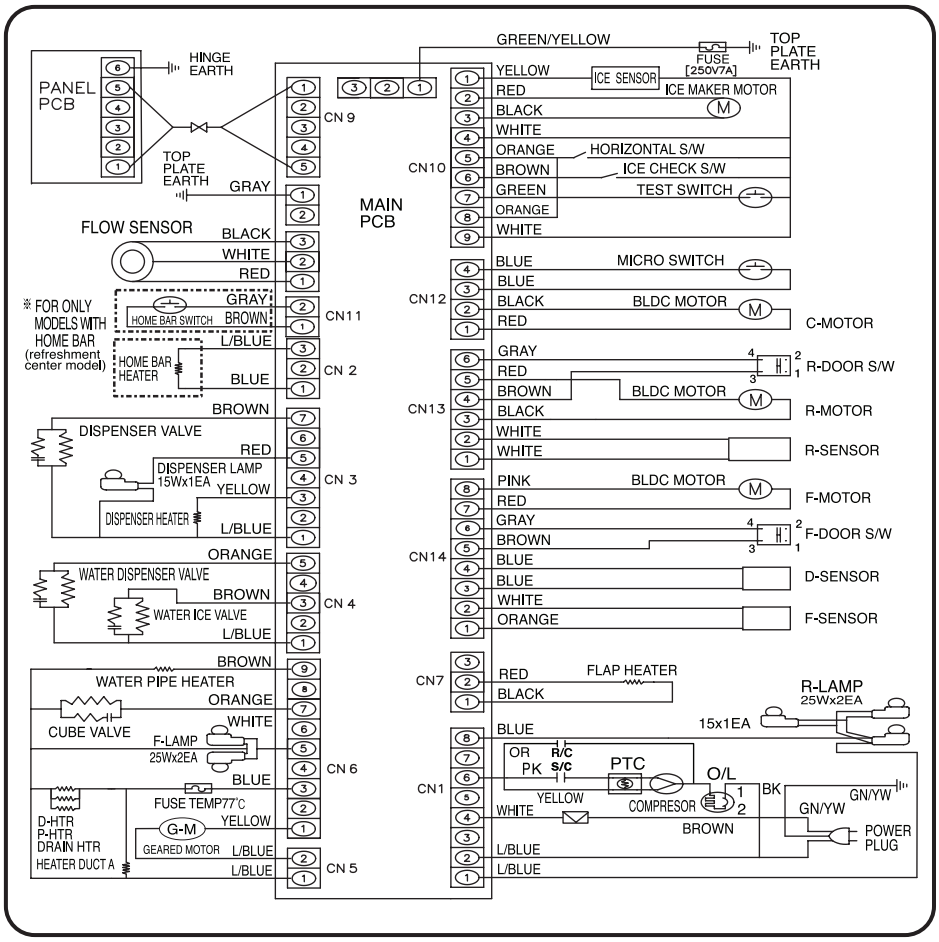
PANEL PCB
HINGE EARTH
TOP PLATE EARTH
GRAY
FLOW SENSOR
BLACK
WHITE
RED
※ FOR ONLY MODELS WITH HOME BAR (refreshment center model)
HOME BAR SWITCH
GRAY
BROWN
L/BLUE
HOME BAR HEATER
BLUE
BROWN
DISPENSER VALVE
RED
DISPENSER LAMP 15Wx1EA
YELLOW
DISPENSER HEATER
L/BLUE
ORANGE
WATER DISPENSER VALVE
BROWN
WATER ICE VALVE
L/BLUE
BROWN
WATER PIPE HEATER
ORANGE
CUBE VALVE
WHITE
F-LAMP 25Wx2EA
BLUE
FUSE TEMP77℃
D-HTR
P-HTR
DRAIN HTR
HEATER DUCT A
G-M
GEARED MOTOR
YELLOW
L/BLUE
L/BLUE
CN 9
CN11
CN 2
CN 3
CN 4
CN 6
CN 5
MAIN PCB
GREEN/YELLOW
FUSE [250V7A]
TOP PLATE EARTH
CN10
YELLOW
RED
BLACK
WHITE
ICE SENSOR
ICE MAKER MOTOR
ORANGE
BROWN
GREEN
ORANGE
WHITE
HORIZONTAL S/W
ICE CHECK S/W
TEST SWITCH
CN12
BLUE
BLUE
BLACK
RED
MICRO SWITCH
BLDC MOTOR
C-MOTOR
CN13
GRAY
RED
BROWN
BLACK
WHITE
WHITE
R-DOOR S/W
BLDC MOTOR
R-MOTOR
R-SENSOR
CN14
PINK
RED
GRAY
BROWN
BLUE
BLUE
WHITE
ORANGE
BLDC MOTOR
F-MOTOR
F-DOOR S/W
D-SENSOR
F-SENSOR
CN7
RED
BLACK
FLAP HEATER
R-LAMP 25Wx2EA
15x1EA
CN1
BLUE
OR
PK
R/C
S/C
PTC
O/L
YELLOW
WHITE
COMPRESOR
BROWN
BK
GN/YW
GN/YW
POWER PLUG
L/BLUE
L/BLUE

2. CIRCUIT WIRING DIAGRAM

Main PCB

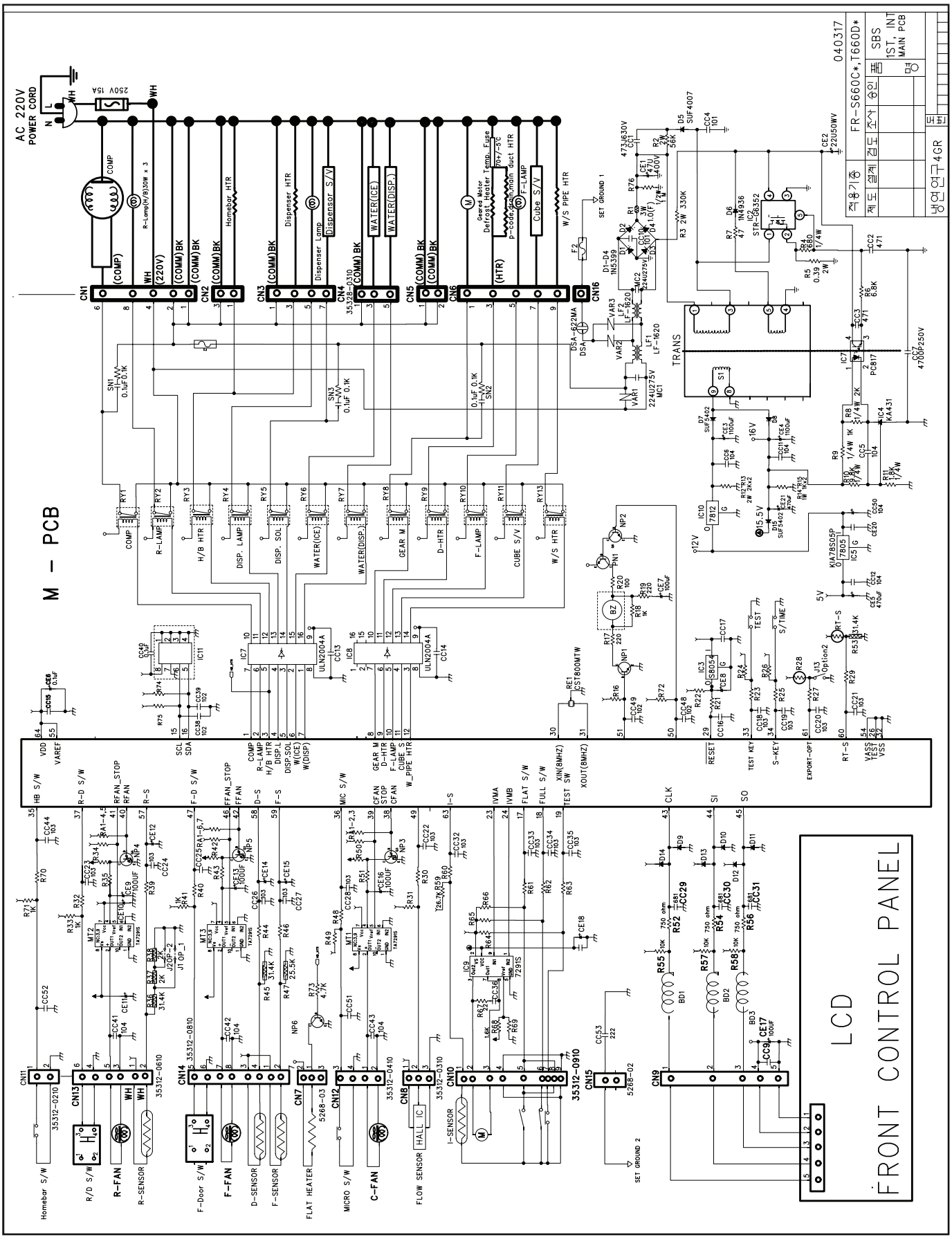

FRONT PCB DIAGRRAM

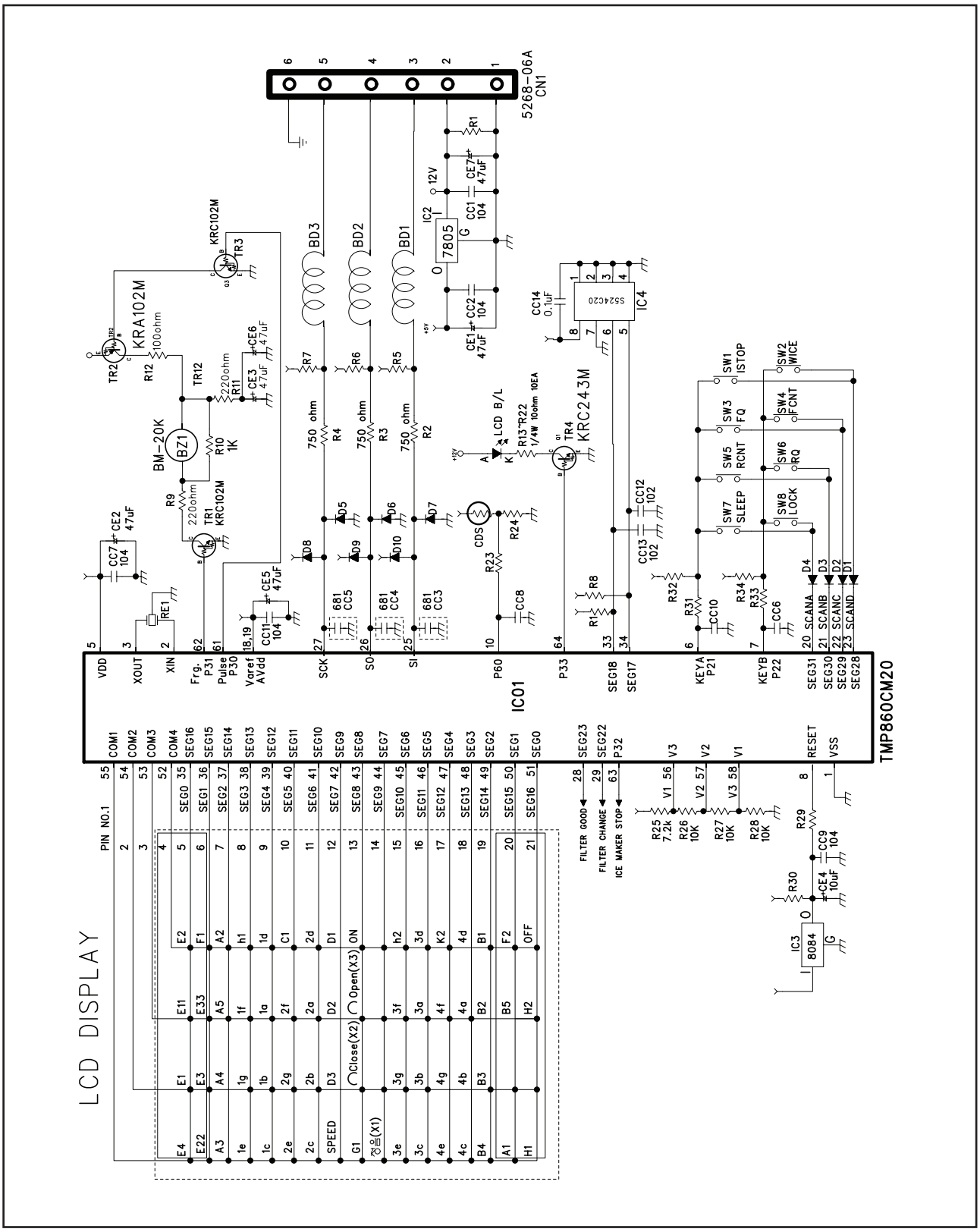

1. Installation Preparation

Check if the refrigerator can pass a doorway or enter a door first.

Dimensions(including Door Handles)
(Width*Depth*Height) 942mm × 803mm × 1812mm

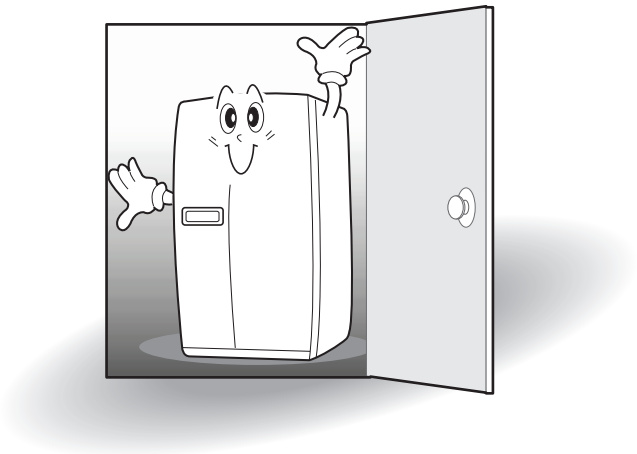

Find a suitable place to install

※Sufficient space from refrigerator back to the wall for free air ventilation

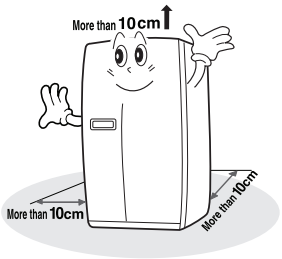

※Avoid direct sunlight.

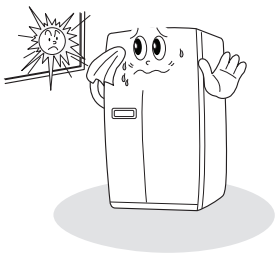

Note

●Once the installation place is ready follow the installation instructions.
If surround temperature of refrigerator is low (below 5℃), foods can be frozen or the refrigerator can work in abnormal way.

If the refrigerator can not enter the door, follow these steps.

Removing Freezer Door

※Remove front bottom cover first, if it is attached.

1 Remove the bottom cover first.
Pull out the left collar of the coupling first, then hold the coupling and pull out the left water tube.

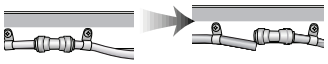

2 Unscrew top hinge cover with a screw driver.
Insert a thin screw driver into the side groove of the cover to remove.

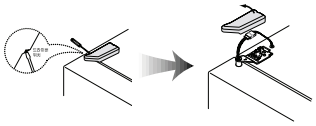

3 Turn top hinge fastener counterclockwise 3~4 times.
Disconnect the harness wires.

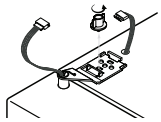

4 Lift up the front of hinge to remove.
(After the hinge is removed the door can fall down forward. Be careful !)

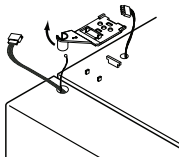

5 Be careful not to damage the water line when removing the door.

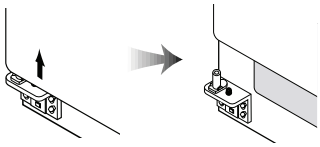

Removing Refrigerator Door

1 Unscrew top hinge cover with a screw driver.
Insert a thin screw driver into the side groove of the cover to remove.

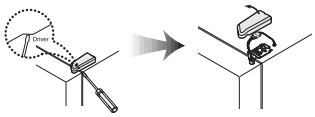

2 Turn top hinge fastener counterclockwise 3~4 times.
Disconnect harness wires.

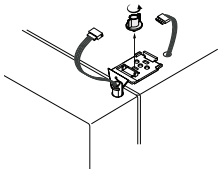

3 Lift up the front of hinge to remove.
(After the hinge is removed the door can fall down forward. Be careful !)

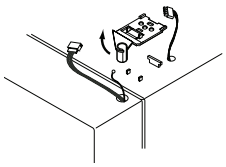

4 Lift the door straight up to remove.

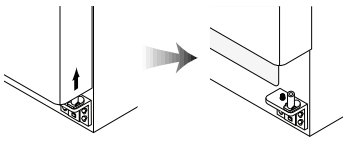

2. How to install water line

How to install Water Line

1. The water pressure should be 3kgf/cm² or more to run the automatic icemaker.
   ※Checkup your tap water pressure ; if a cup of 180cc is full within 10 seconds, the pressure is OK.
2. When installing the water tubes, ensure they are not colse to any hot surfaces.
3. The water filter only "filters"water ; it does not eliminate any bacteria or microbes.
4. If the water pressure is not so high to run the icemaker, call the local plumber to get an additional water pressure pump.
5. The filter life depends on the amount of use. We recommend you replace the filter at least once every 6months.
   ※When attaching the filter, place it for easy access (removing & replacing)
6. After installation of refrigerator and water line system, select [WATER] on your control panel and press it for 2~3 minutes to supply water into the water tank and dispense water.
7. Use sealing tape to every connection of pipes/tubes to ensure there is no water leak.
8. The water tube should be connected to the cold water line.

WATER SUPPY KIT

※ Check the parts below for installing water supply. Some other necessary parts are available at your local service agents.

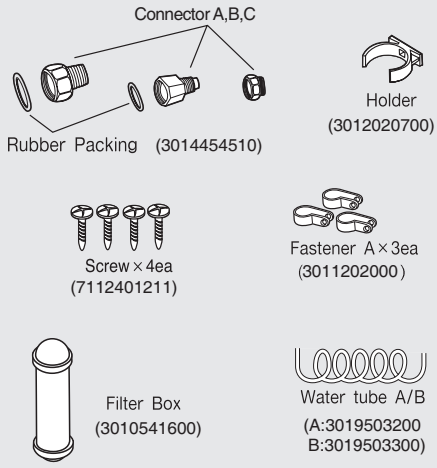

Installation Procedure

1. Join Connector to the tap water line

1) First lock the main tap water valve.
   Check if connector B and C has its own rubber packing ring in it.
2) Join Connector-C to the water tap, then Connector -B to connector -C with a wrench or spanner.
3) Insert water pipe into Connector-B and join Connector-A with a wrench or spanner.
4) In case Connector-C does not fit water tap join Connector-B directly to the tap.(See Figure B.)
   ※If no connector fits water tap, call your local service.
5) Unlock main tap water valve, open tap water and check if any water leaks on each joins.

Achtung
Place the rubber washer inside the tap connector and screw onto the water tap.

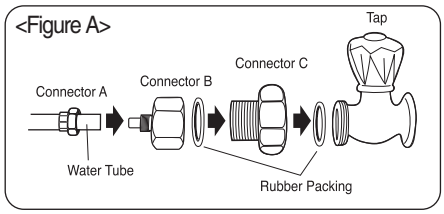

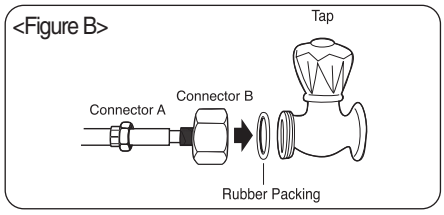

2. Get ready to install the Water Filter

1) Measure an approximate distance between the filter and the Water Tube and cut the tube off filter vertically.
2) Connect the tubes to the filter as the figure shows.

Achtung
Leave a sufficient distance when cutting the tubes.

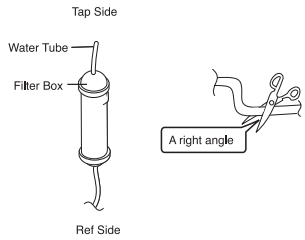

3. Remove any substances in the filter.

1) Open the main tap water valve and check if water comes out of the Water Tube.
2) Check if the Water Valve is open in case water does not come out.
3) Leave the valve open until clean water is coming out.

※ Initial water may contain some substances out of filter (manufacturing process).

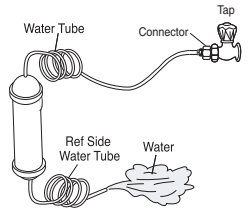

4. Attach the Filter Box

1) Screw and fasten the filter holder to the left/right side of the back of refrigerator.
   ※ In case the holder is not fastened well, remove the back paper of the tape on the filter holder and attach it."
2) Insert the filter box into the holder.

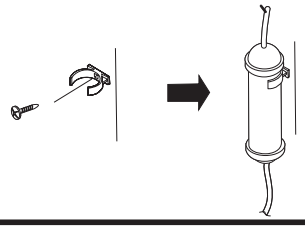

5. Connect the Water Tube to the refrigerator.

1) Remove the rear cover at the bottom back of the refrigerator.
2) Insert the fastening ring into the Water tube. (Be careful to follow the direction of the nut.)
3) Insert the Water Tube into the top of Water Valve, turn the nut clockwise to fasten it. (The Water valve is to the right of the motors.)
4) Check for any bent tubes or water leaks; if so, re-ckeck instalation procedure.
5) Replace the rear cover. (The Water Tube should be placed between the groove of the refrigerator back and motor cover.)

Achtung Set the tube upright as the figure shows.

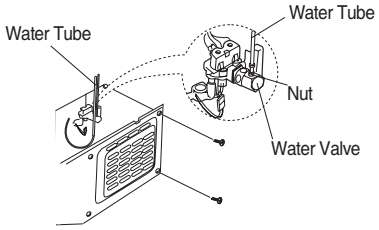

6. Fasten the Water Tube.

1) Fasten the Water Tube with the [Fastener A] .
2) Check if the tube is bent or sqeezed. If so, set it right to prevent any water leak.

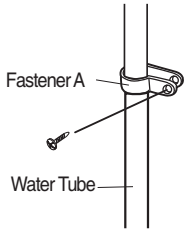

7. After installation of Water Supply System

1) Plug the refrigerator, press the [WATER] button on the control panel for 2~3 minutes to remove any air (bubble) in the pipes and drain out the initial water.
2) Check the water leak again through the water supply system (tubes, connectors and pipes) Rearrange the tubes again and do not move the refrigerator.

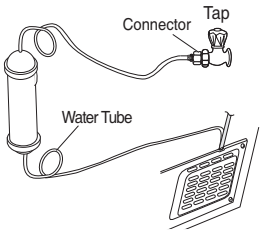

Replacing Freezer Door

1 Insert the water tube into the hole of the bottom hinge pin first, then Insert the bottom of freezer door into the bottom hinge pin.

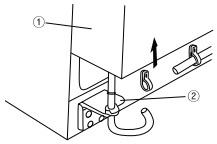

2 Insert the bottom hole of freezer door straight to the bottom hinge pin.

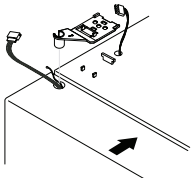

3 Let the top of door close to the cabinet and insert the top hinge pin to the top hole of freezer door. (Insert the back of hinge to the groove of protrusion first, then front to the top hole of door.)

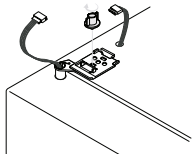

4 Turn the hinge fastener tightly to the end.
Connect harness wirings and screw ground wire.

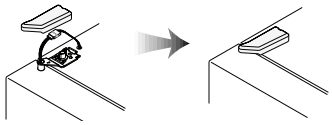

5 Insert the water tube far into the coupling.

Replacing Refrigerator Door

1 Insert the bottom hole of refrigerator door straight to the bottom hinge pin

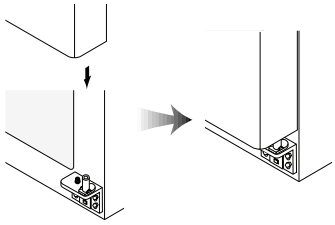

2 Let the top of door close to the cabinet and insert the top hinge pin to the top hole of freezer door
(Insert the back of hinge to the groove of protrusion first, then front to the top hole of door.)

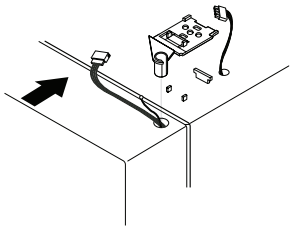

3 Turn the hinge fastener tightly to the end.
Connect harness wirings and screw ground wire.
Click and screw the top hinge cover.

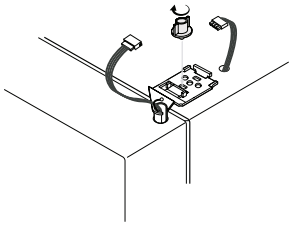

3. Refrigerator Leveling & Door Adjustment(If needed.)

Refrigerator must be level in order to maintain optimal performance and desirable front appearance.
(If the floor beneath the refrigerator is uneven, freezer and refrigerator doors look unbalanced.)

In case freezer door is lower than refrigerator door ...

1 Insert a screw driver (flat tip) into a groove of the left wheel (bottom of freezer) and turn it clockwise until the door is balanced. (clockwise to raise freezer door ; counterclockwise to lower)
※Unless the freezer door is balanced by step 1, then follow the next steps.

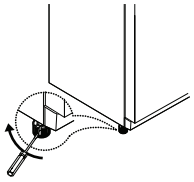

2 Open the doors, unscrew the front cover and remove, if it is attached.

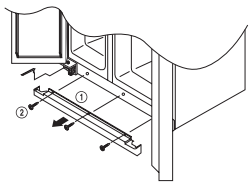

3 Loosen 3 hinge bolts(1 on the left + 2 on the right) a little. (Do not unfasten them completely.) Insert a hexagonal wrench into the groove of adjusting nut and turn clockwise until the door is level.

4 Once the door is balanced, fasten the hinge bolts tightly and screw the front cover.

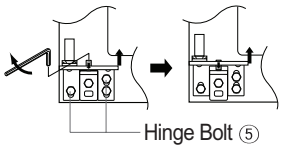

Caution

- The front of refrigerator needs to be higher just a little than the back for easy door closing, but if the wheel is raised too much for door balance, i.e. front of refrigerator is too higher than the back, it can be difficult to open the door.

In case refrigerator door is lower than freezer door ...

1 Insert a screw driver (flat tip) into a groove of the right wheel (bottom of refrigerator) and turn it clockwise until the door is balanced. (clockwise to raise refrigerator door ; counterclockwise to lower)

※Unless the refrigerator door is balanced by step 1, then follow the next steps.

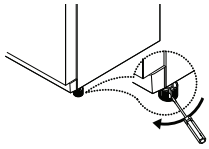

2 Loosen 3 hinge bolts(2 on the left + 1 on the right) a little. (Do not unfasten them completely.)
Insert a hexagonal wrench into the groove of adjusting nut and turn clockwise until the door is level.

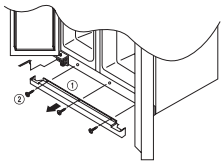

3 Once the door is balanced, fasten the hinge bolts tightly.

Front Cover

After installation and/or door leveling, fasten front cover with screws.(Remove the screws on the front bottom panel first. Click and screw the cover)

Attaching of W ater Filter Holder

Remove the back paper of the tape on the filter holder and attach the filter holder on a suitable place.

EXPLODED VIEW

1. FRS-T20DA*

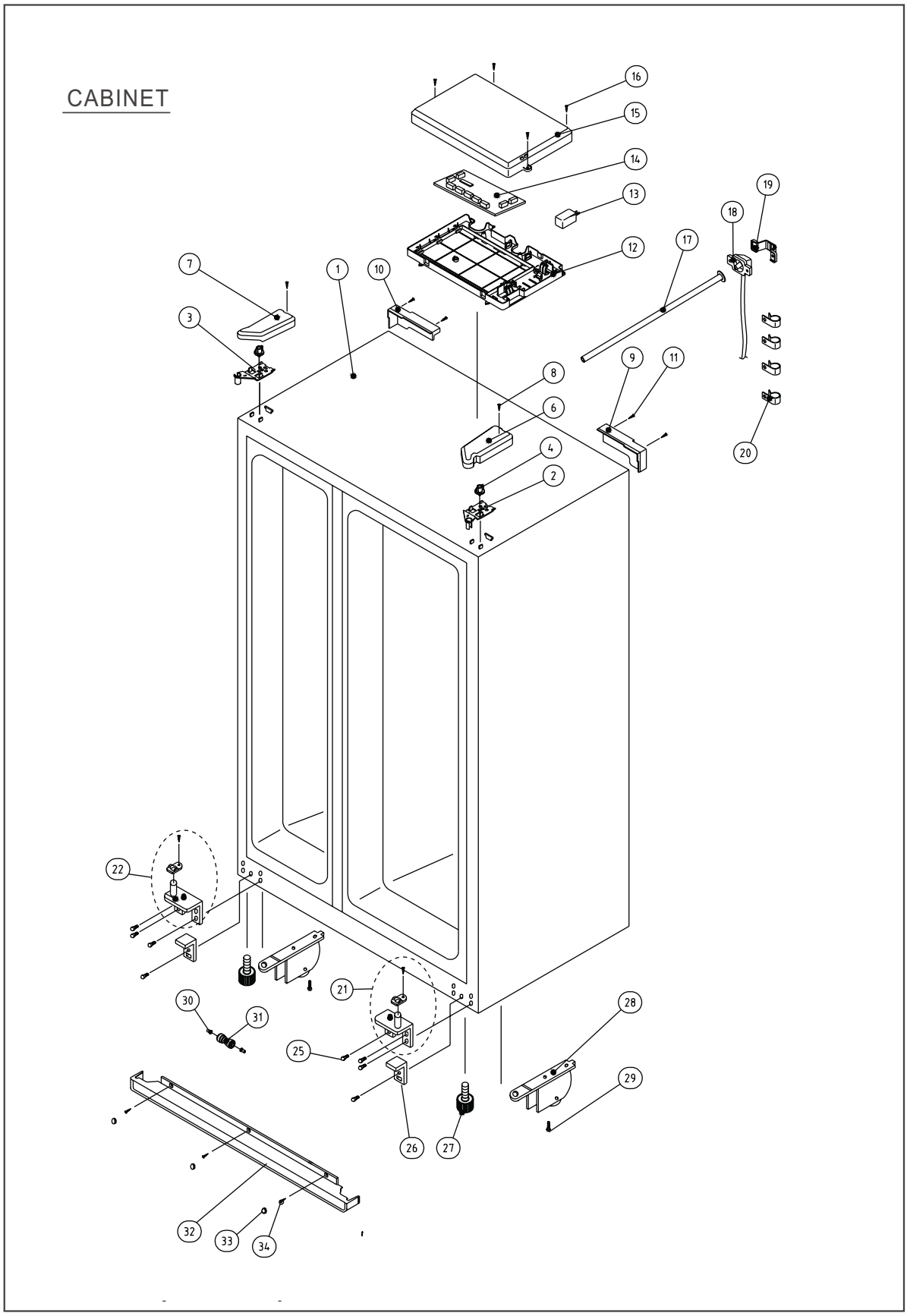

EXPLODED VIEW

MECH ROOM

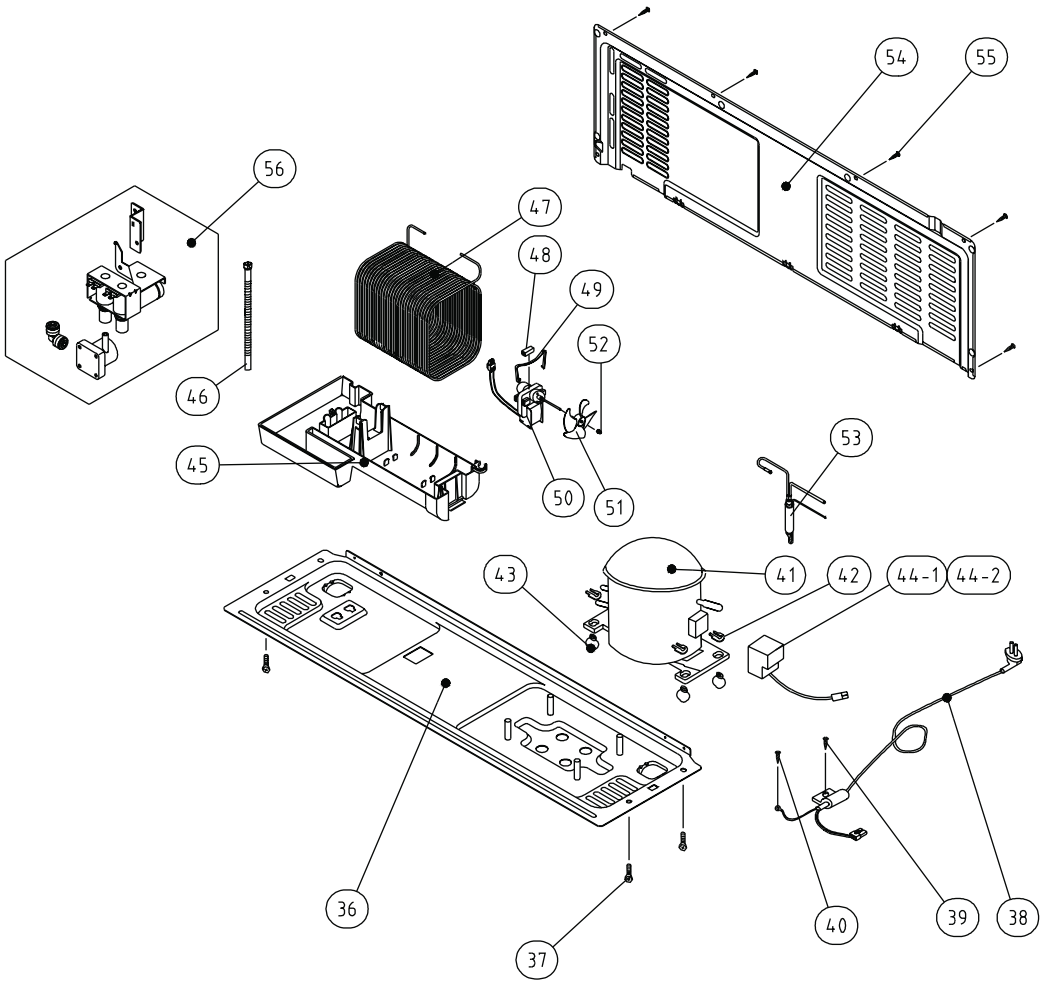

EXPLODED VIEW

R-Room

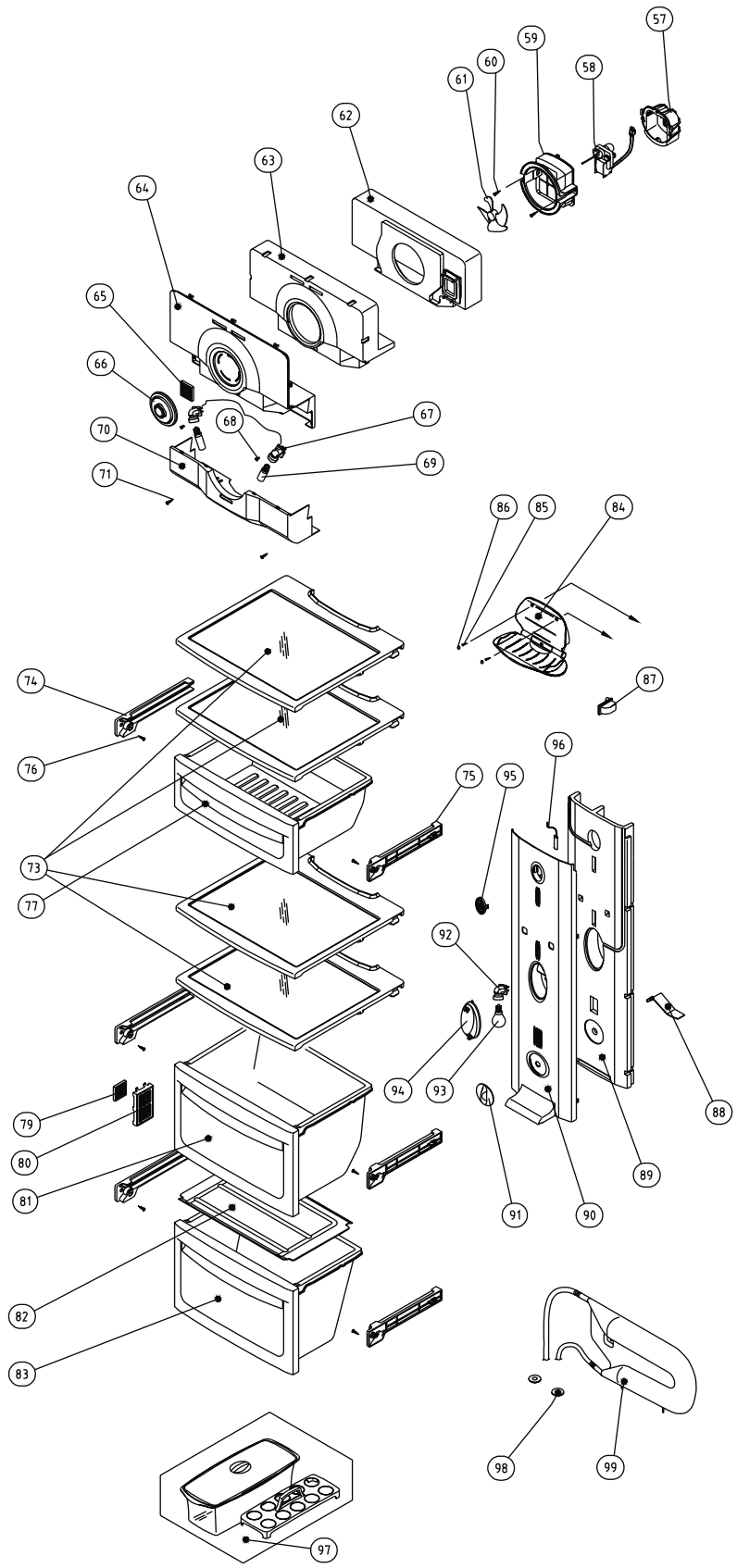

EXPLODED VIEW

F ROOM

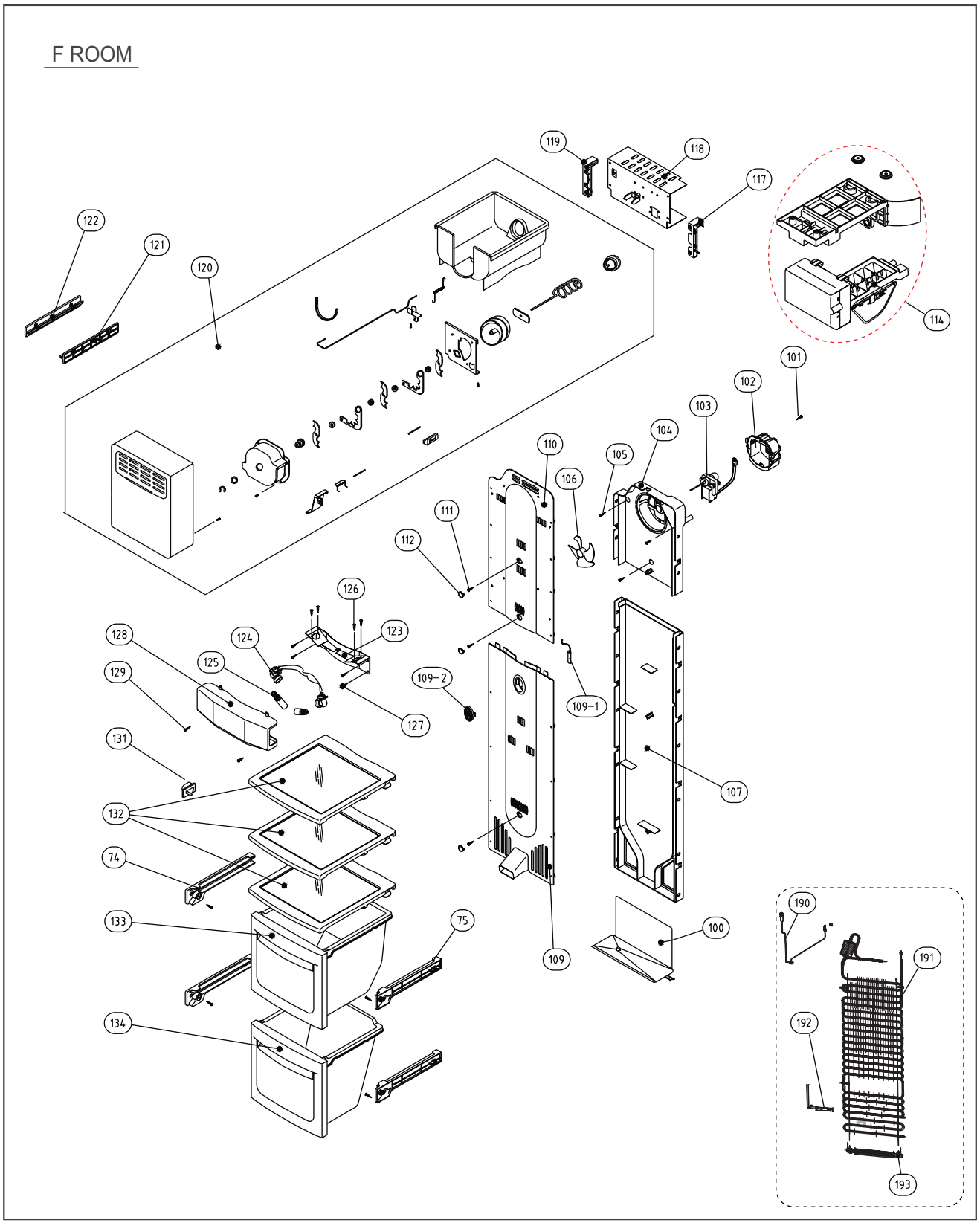

EXPLODED VIEW

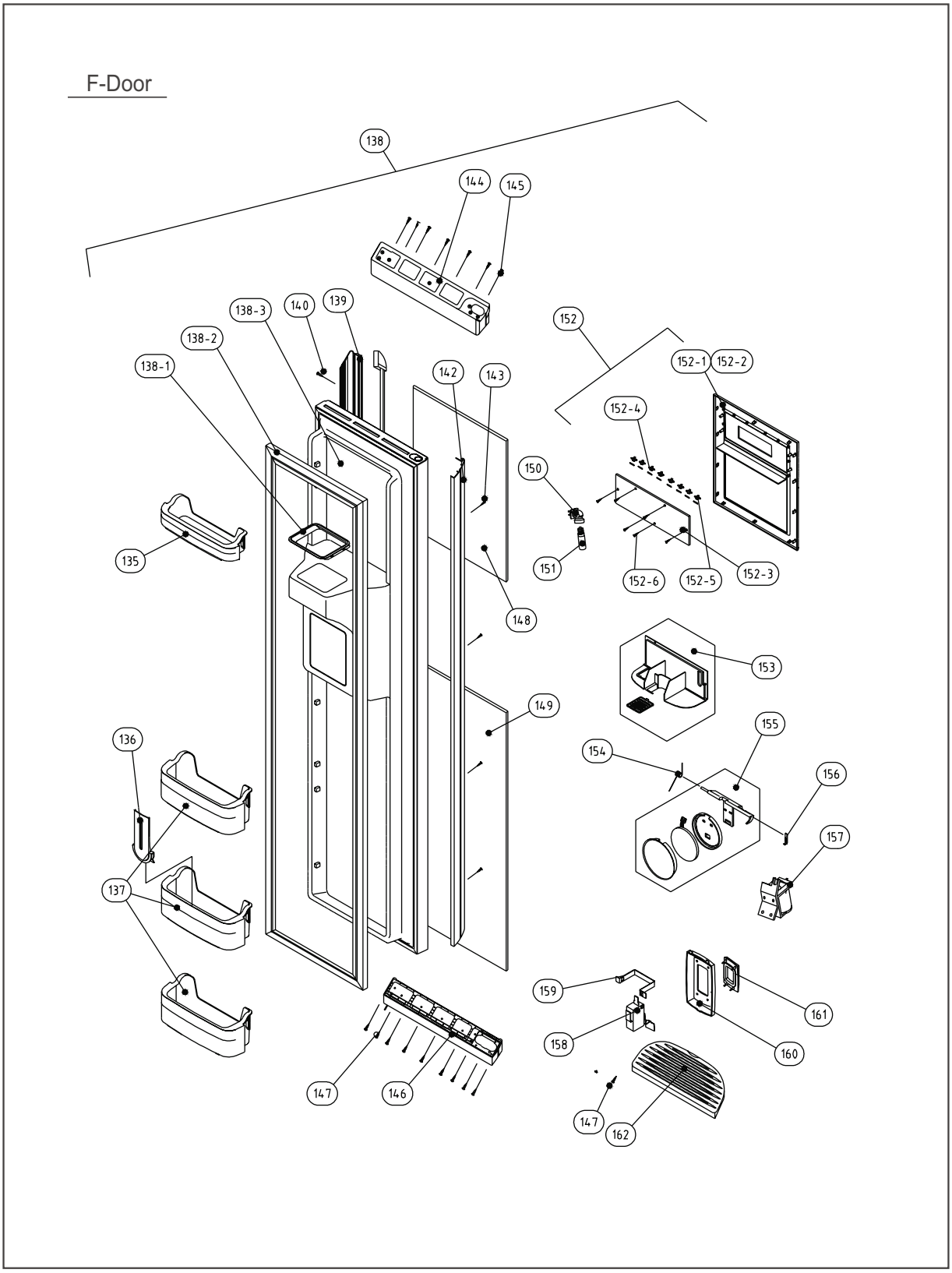

EXPLODED VIEW

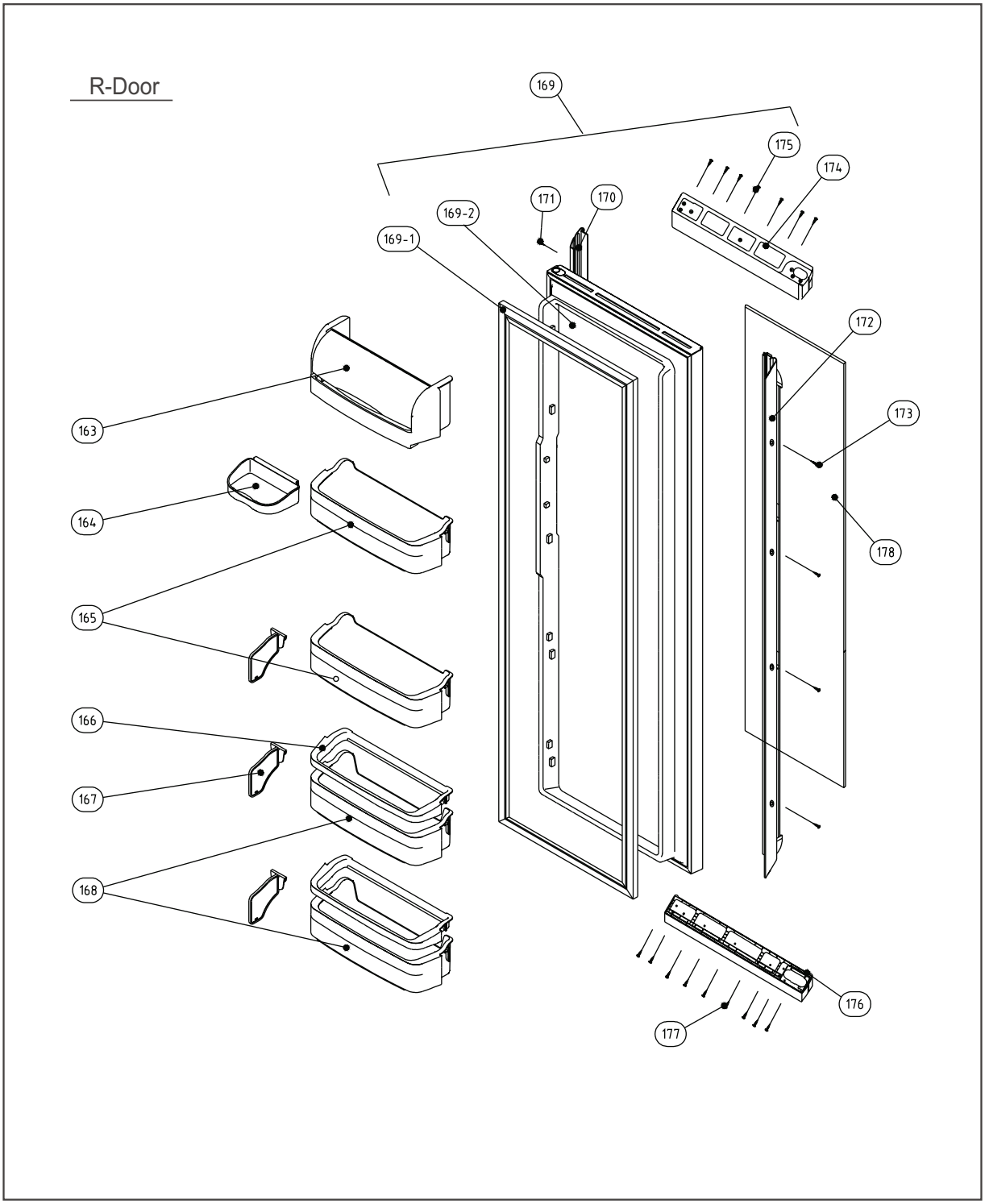

2. FRS-T20DA* Parts List

NO	Part Number	Parts Name	Q'ty	Description
1	3000025800	ASSY CAB URT	1	
2	3012908100	HINGE *T *R AS	1	PO T3.0
3	3012907400	HINGE *T *L AS	1	PO T3.0
4	3016031400	SPECIAL SCREW	2	
6	3011472400	COVER HI *T *R	1	PP
7	3011472300	COVER HI *T *L	1	PP
8	7112401211	SCREW TAPPING	2	T1 TRS 4 x 12 MFZN
9	3012601301	HANDLE CAB COVR *R	1	PP
10	3012601201	HANDLE CAB COVR *L	1	PP
11	7112401211	SCREW TAPPING	1	T1 TRS 4 x 12 MFZN
12	3010533400	BOX MAIN PCB	1	PP
13		**CAPACITOR RUN**	1	
14		**PCB MAIN AS**	1	
15	3011472610	COVER MAIN PCB BOX	1	PP
16	7112401211	SCREW TAPPING	1	T1 TRS 4 x 12 MFZN
17	3013223400	HOSE ICE MAKER TUBE AS	1	
18	3012519200	GUIDE CAB W/TUBE A AS	1	
19	3011485600	COVER GUIDE CAB W/TUBE A	1	HIPS
20	3011202000	CLAMP WATER TUBE A	5	PA-66
21	3012907300	HINGE *U *R AS	1	PO T5.0
22	3012907200	HINGE *U *L AS	1	PO T5.0
25	3016001240	SPECIAL BOLT *T	8	6 x 22 SWCH22A(YL)
26	3015306700	SUPPORTER *U HI AS	2	PO T5.0
27	3012104400	FOOT ADJUST AS	2	
28	3010654500	BRACKET ADJ FOOT AS	2	TURN
29	3016001240	SPECIAL BOLT *T	2	6 x 22 SWCH22A(YL)
30	3012019500	FIXTURE TUBE FIT B	2	PP
31	3013064200	HOLDER TUBE A	1	ACETAL
32	3011433500	COVER CAB BRKT	1	PP
33	3010962400	CAP CAB BRKT COVR	3	NR
34	7142401611	SCREW TAPPING	3	T2 TRS 4 x 16 MFZN
36	3010326701	BASE COMP AS	1	SBHG T1.2
37	3016003300	SPECIAL BOLT	4	T2 M6.5 x 20 4EA

NO	Part Number	Parts Name	Q'ty	Description
38		**CORD POWER AS**	1	
39	7112401211	SCREW TAPPING	1	T1 TRS 4 x 12 MFZN
40	7051401065	SCREW MACHINE	1	PAN 4 x 10 SW BSNI
41		**COMP**	1	
42	3016002500	SPECIAL WASHER	4	SK-5 T0.8
43	3010101600	RUBBER ABSORBER COMP	4	NBR
44-1		**SWITCH P RELAY AS**	1	
44-2	3811402100	COVER RELAY	1	DS3-3NORYL S/S
45	3011113500	CASE VAPORI	1	PP + CTALC
46	3013201700	HOSE DRAIN B	1	PE FRB-5350NT
47	3014413730	PIPE WICON AS	1	
48	3010102100	ABSORBER C MOTR	1	NR FRB-5350NT
49	3012004400	FIXTURE C MOTR	1	SUS
50	3015911500	MOTOR C FAN AS	1	DC12V 2.5W
51	3011802200	FAN	1	ABS (O.D.)3.17 x D110
52	3011200500	CLAMP FAN	1	SUS 304
53	3016806900	DRYER AS	1	XH-9 15g
54	3011474730	COVER MACHROOM AS	1	SBHG T0.4
55	7112401211	SCREW TAPPING	6	T1 TRS 4 x 12 MFZN
56		**VALVE WATER AS**	1	
57	3012007800	FIXTURE MOTOR A	1	PP
58	3015911400	MOTER R FAN AS	1	
59	3012007900	FIXTURE MOTOR B	1	HIPS
60	7122401211	SCREW TAPPING	2	T2S TRS 4 x 12 MFZN
61	3011802200	FAN	1	ABS (O.D.)3.17 x D110
62	3013344200	INSU DAMP B	1	F-PS
63	3013344100	INSU DAMP A	1	F-PS
64	3011471200	COVER DAMP	1	HIPS
65	3018701800	DEO ANTI AS	1	
66	3011471300	COVER DEO	1	ABS
67	3017905300	SOCKET R LAMP AS	2	
68	7121300811	SCREW TAPPING	1	T2 PAN 3X8
69		**LAMP R A**	1	
70	3015507900	WINDOW R LAMP A	1	MIPS

NO	Part Numb er	Parts Name	Q'ty	Description
71	3016002710	SPECIAL SCREW	1	T2S PAN 3X8
73	3017827320	SHELF R A AS	4	FRAME + SHELF + FIXTURE
74	3012514500	GUIDE CASE A *L AS	5	ABS
75	3012514600	GUIDE CASE A *R AS	5	ABS
76	7142401611	SCREW TAPPING	14	T2 TRS 4 x 16 MFZN
77	3011171220	CASE CHILLED AS	1	GPPS + HIPS
79	3018701800	DEO ANTI AS	1	
80	3011472900	COVER RETURN DUCT	1	HIPS
81	3011172020	CASE VEGETB A AS	1	GPPS + HIPS
82	3011473200	COVER VEGETB CASE B	1	GPPS
83	3011172160	CASE VEGETB B AS	1	GPPS + HIPS
84	3017827500	SHELF WINE AS	1	ABS
85	3016002710	SPECIAL SCREW	2	4 x 12
86	3010903200	CAP SCREW	2	PE
87	3018124000	SWITCH LAMP	1	SP201R-7DR
88	3017100500	FLAP MULT DUCT	1	PP
89	3013345000	INSU MULT DUCT AS	1	F-PS
90	3011472750	COVER MULT DUCT	1	HIPS
91	3013408100	KNOB MULT DUCT	1	ABS
92	3017905310	SOCKET R LAMP AS	1	250V 1A
93		LAMP R B	1	
94	3015508000	WINDOW R LAMP B	1	MIPS
95	3011473000	COVER SENS	1	ABS
96	3014805400	SENSOR R AS	1	PBN-438
97	3011171330	CASE EGG AS	1	GPPS
98	30140002500	PACKING W/TUBE GUIDE A	2	SILICON
99	3018200801	TANK WATER AS	1	FR-S660CW
100	3012515000	GUIDE DRN AS	1	FR-S660CW
101	7112401211	SCREW TAPPING	1	T1 TRS 4 x 12 MFZN
102	3012007800	FIXTURE MOTOR A	1	PP
103	3015911300	MOTOR F FAN AS	1	DC12V 2.5W
104	3018914400	LOUVER F C	1	PP
105	7142401611	SCREW TAPPING	3	T2 TRS 4 x 16 MFZN
106	3011834500	FAN	1	ABS (O.D.)3.17 x D130

NO	Part Numb er	Parts Name	Q'ty	Description
107	3018914910	LOUVER F D AS	1	PP
109	3018914700	LOUVER F B AS	1	HIPS
109-1	3014805300	SENSOR F AS	1	PT-38
109-2	3011473000	COVER SENSOR	1	ABS
110	3018914630	LOUVER F A AS	1	HIPS
111	7142401611	SCREW TAPPING	3	T2 TRS 4 x 16 MFZN
112	3010924600	CAP F LUVR	3	HIPS
114	3012205800	FRAME ICE MAKER AS	1	FR-S660CW
117	3012517900	GUIDE G/MOTR BRACKET *R	1	ABS
118		BRACKET G/MOTR AS	1	
119	3012517800	GUIDE G/MOTR BRACKET *L	1	ABS
120	3011176230	CASE ICE CRUSHER AS	1	FRS-551F
121	3012517700	GUIDE ICE CRUSHER *R	1	ABS
122	3012520500	GUIDE ICE CRUSHER *L	1	ABS
123	3014559510	PLATE LAMP F	1	SBHG T0.8
124	3017905200	SOCKET F LAMP AS	2	
125		LAMP F	2	
126	7121300811	SCREW TAPPING	4	T2S PAN 3X8 MFZN
127	7112401211	SCREW TAPPING	4	T1 TRS 4 x 12 MFZN
128	3015507710	WINDOW F LAMP	1	MIPS
129	3016002710	SPECIAL SCREW	2	4 x 12
131	3018124000	SWITCH LAMP	1	SP201R-7DR
132	3017827120	SHELF F A AS	3	GLASS + HIPS
133	3011171460	CASE F A AS	1	GPPS + HIPS
134	3011171530	CASE F B AS	1	GPPS + HIPS
135	3019019030	POCKET F *S	1	HIPS
136	3012516000	GUIDE F POCKET	1	PP
137	3019019120	POCKET F	3	HIPS
138		ASSY F DR	1	FR-T660DD
138-1	3010957100	CAP ICE PATH FRAME	1	HIPS
138-2	3012314200	GASKET F DR AS	1	PVC
138-3	3011754100	DOOR F URT AS	1	

NO	Part Number	Parts Name	Q'ty	Description
139	3012604500	HANDLE INTR DR AS	1	AL
140	3016040200	SPECIAL SCREW FRAME	4	4X14 S18C
142	3012201500	FRAME F DR *O	1	AL
143	3016040200	SPECIAL SCREW FRAME	4	4X14 S18C
144	3010930300	CAP F INTR DR *T	1	ABS+SPRAY
145	7142401211	SCREW TAPPING	7	T2 TRS 4X12 MFZN
146	3010930400	CAP F INRT DR *U AS	1	ABS+SPRAY
147	7142401211	SCREW TAPPING	9	T2 TRS 4X12 MFZN
148		**PANEL F DR *T**	1	
149		**PANEL F DR *U**	1	
150	3017905500	SOCKET DISP BOX AS	1	250V 1A
151	3013600020	LAMP DISP	1	AC240V 15W
152	**3011490200**	**COVER DISPNS BOX AS**	**1**	**OTHER COLOR**
	3011490210	**COVER DISPNS BOX AS**	**1**	**BK MIRROR**
152-1	3011437000	COVER DISPNS BOX	1	ABS+SPRAY
152-2	**3015509300**	**WINDOW F PCB AS**	**1**	**OTHER COLOR**
	3015509310	**WINDOW F PCB AS**	**1**	**BK MIRROR**
152-3	30143C4110	PCB *F AS	1	
152-4	3016303400	BUTTON CONTL	8	ABS+AL
152-5	3012307800	GASKET BUTN	1	NR
152-6	7173300811	SCREW TAPPTITE	7	TT2 BIN 3X8 MFZN
153	3010542200	BOX DISPNS ICE SHUT AS	1	
154	3015102200	SPRING ICE D/LEVER	1	Ø0.9 SUS 304
155	3011485900	COVER ICE FLAP AS	1	
156	3012019700	FIXTURE ICE FLAP AS	1	SUS304
157		**VALVE SOL DISP**	1	DISP SN6
158	3018125800	SWITCH MICRO	1	VP333A-2D
159	3012020000	FIXTURE MICRO S/W	1	T0.6 SUS304-3/4H
160	3012208100	FRAME DISPNS BUTN	1	ABS+AL
161	3016303800	BUTTON DISPNS	1	SILICON
162	3012406200	GRILLE DISPNS	1	ABS
163	3019019400	POCKET DAIRY AS	1	POCKET + COVER
164	3019019310	POCKET R *S	1	GP + BLUE
165	3019019830	POCKET R *M	2	HIPS

NO	Part Numb er	Parts Name	Q'ty	Description
166	3012514100	GUIDE R POKT	2	HIPS
167	3012513400	GUIDE BOTL	3	PP
168	3019019230	POCKET R	2	HIPS + SILK
169	3000039500	ASSY R DR	1	FR-T690DG
169-1	3012314500	GASKET R DR AS	1	PVC
169-2	3011754200	DOOR R URT AS	1	FR-T690DG
170	3012201800	FRAEM R DR *O	1	AL
171	3016040200	SPECIAL SCREW FRAME	4	4X14 S18C
172	3012604500	HANDLE INTR DR AS	1	
173	3016040200	SPECIAL SCREW FRAME	4	4X14 S18C
174	3010930500	CAP R INTR DR *T	1	ABS+SPRAY
175	7142401211	SCREW TAPPING	7	T2 TRS 4X14 MFZN
176	3010964400	CAP R INTR DR *U AS	1	ABS+SPRAY
177	7142401211	SCREW TAPPING	7	T2 TRS 4X14 MFZN
178		PANEL R DR	1	
190	3014805200	SENSOR D AS	1	PBN-43
191		EVA AS	1	
192		FUSE TEMP AS	1	
193		HEATER D AS	1	

RED PARTS ARE MODEL DEPENDENT.

3. FRS-T20FA*

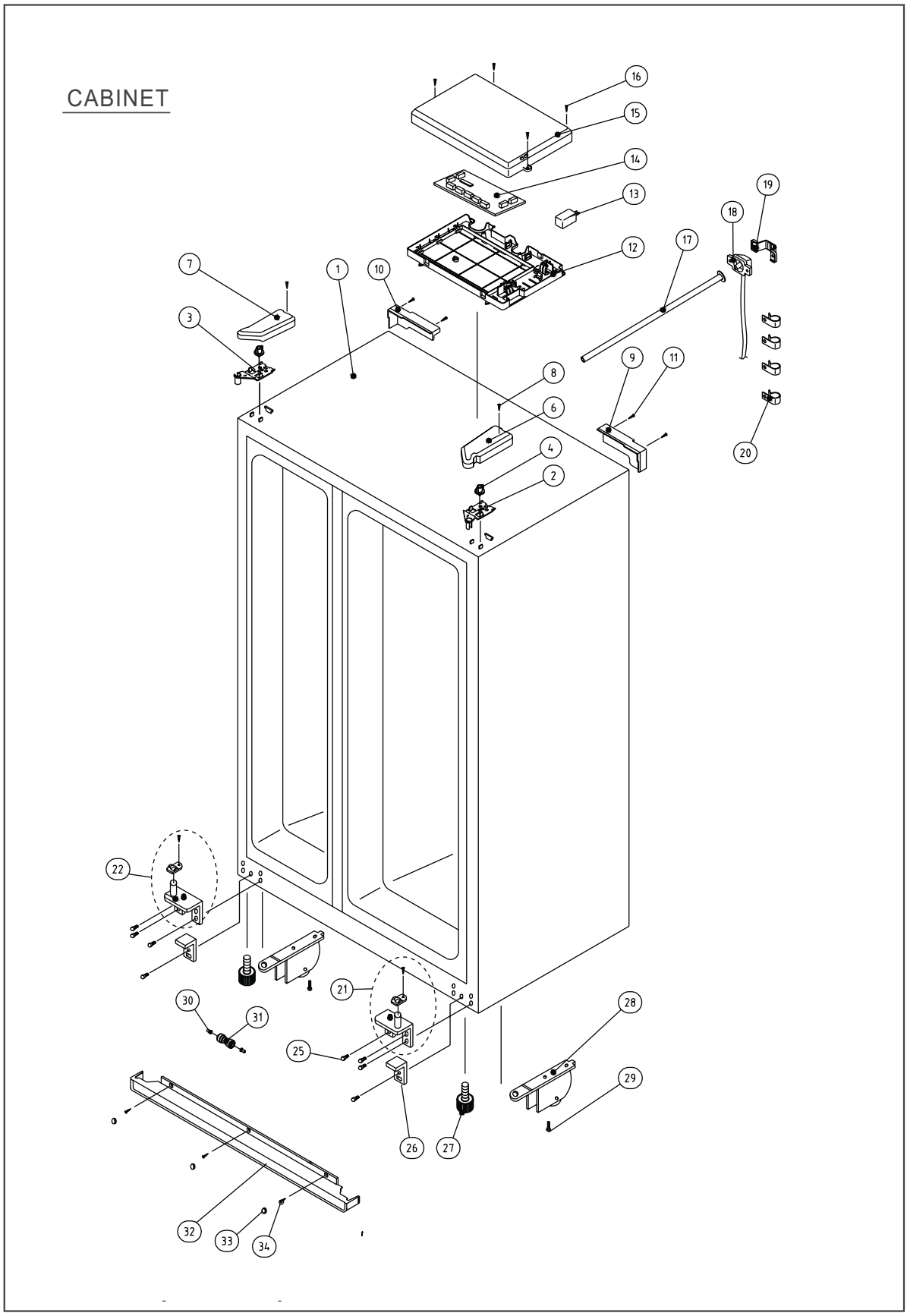
CABINET
16
15
14
13
12
19
18
17
7
1
10
3
9
11
8
6
4
2
20
22
21
30
31
28
25
29
26
27
32
33
34

EXPLODED VIEW

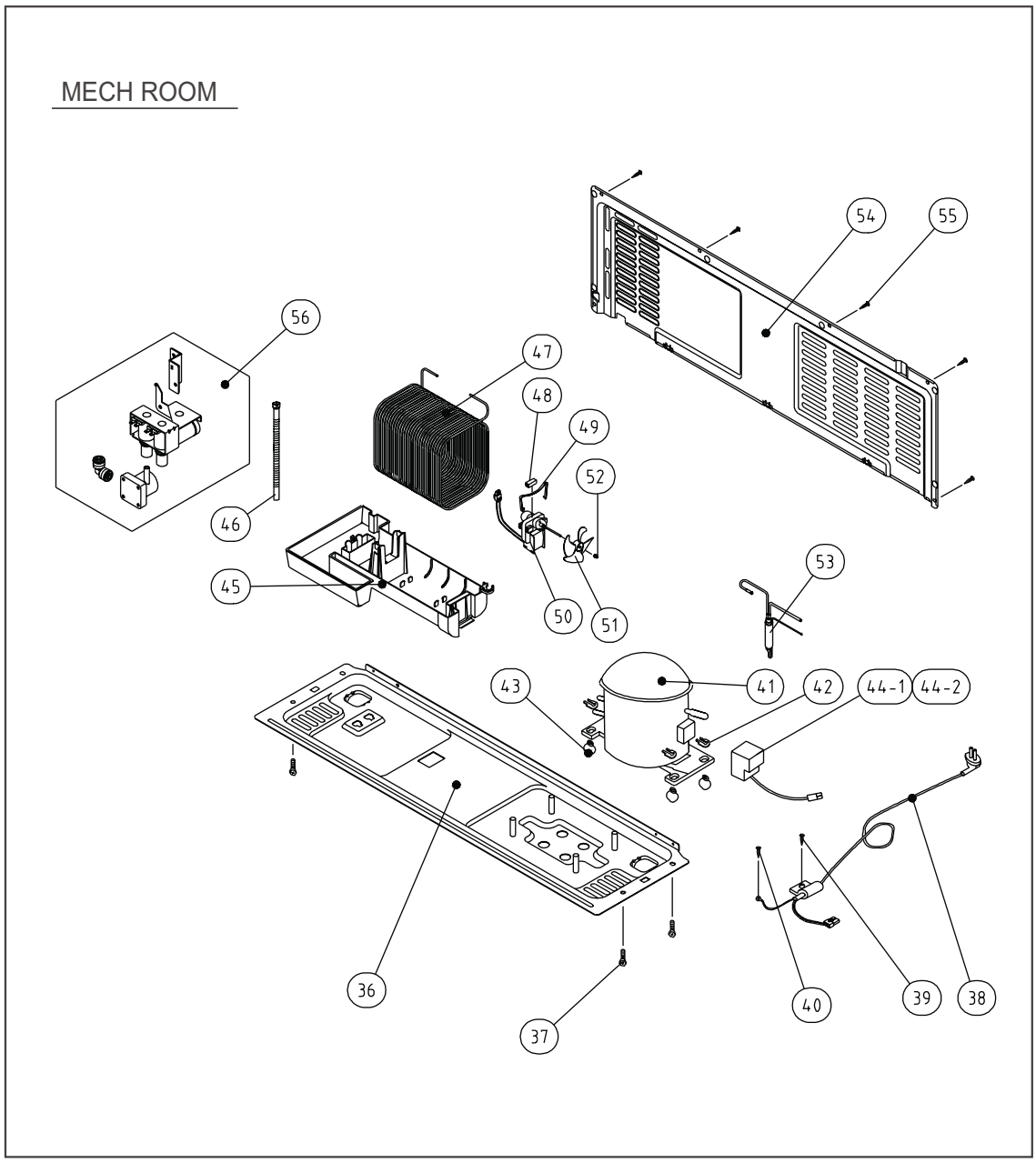

EXPLODED VIEW

R-Room

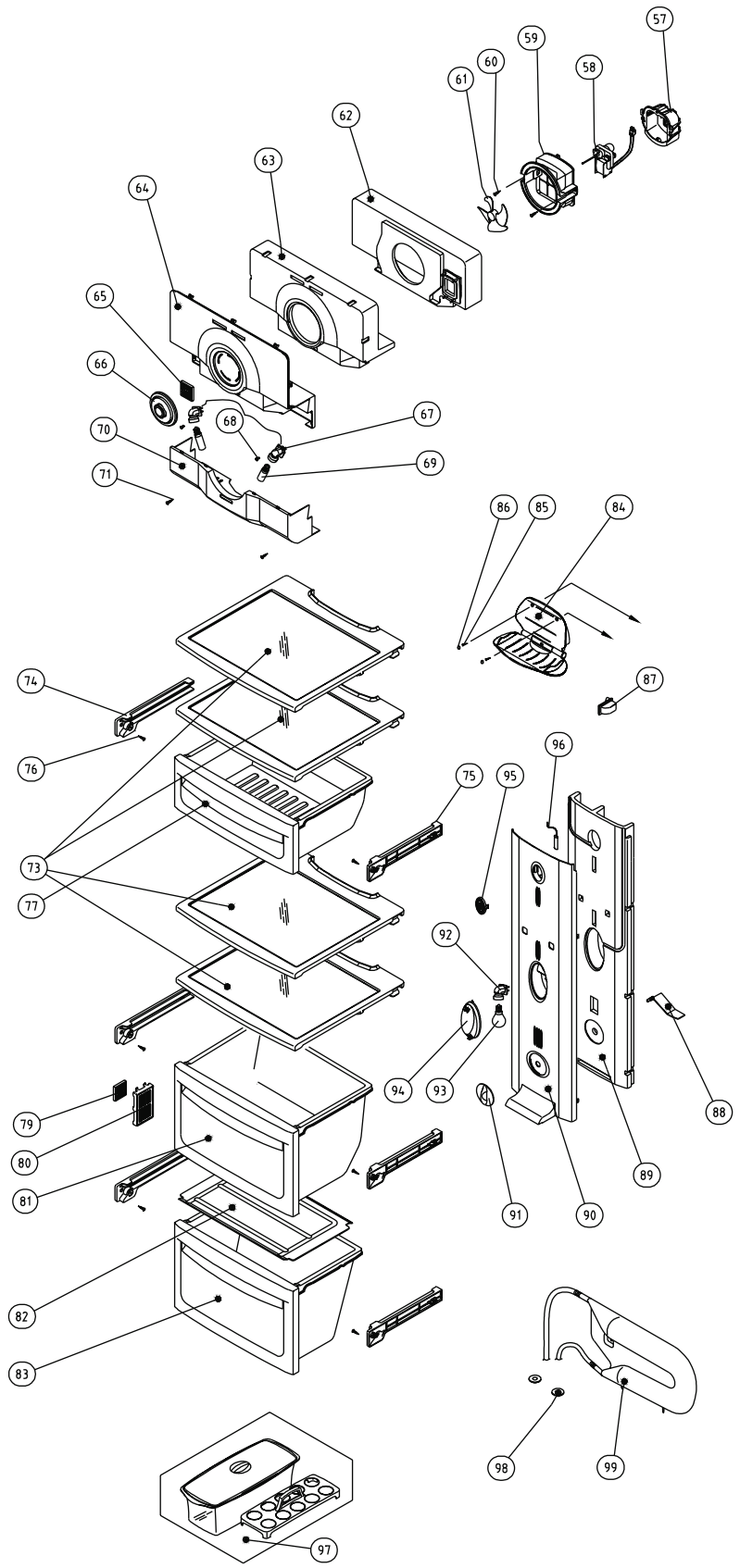

EXPLODED VIEW

F ROOM

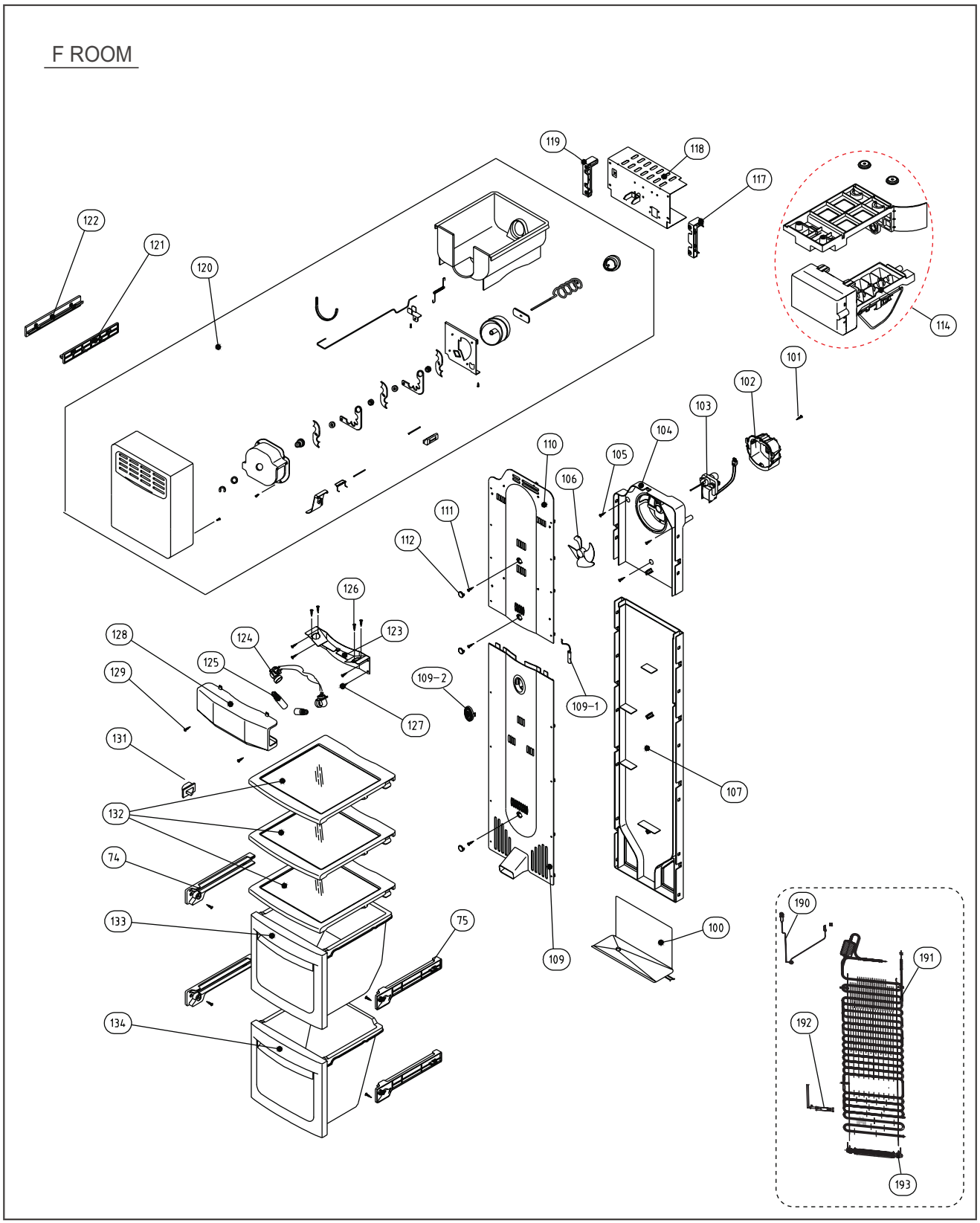

EXPLODED VIEW

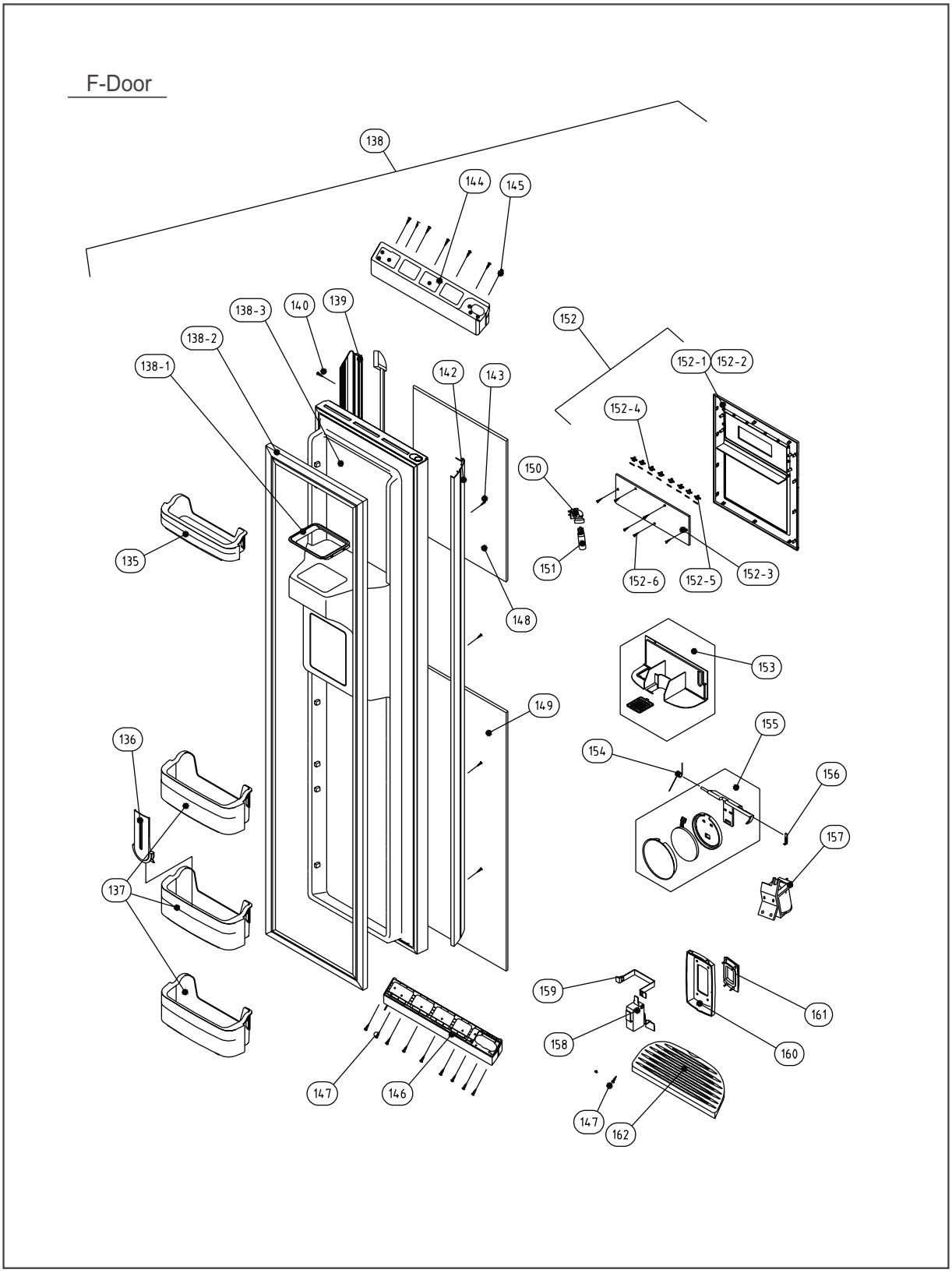

EXPLODED VIEW

R-Door

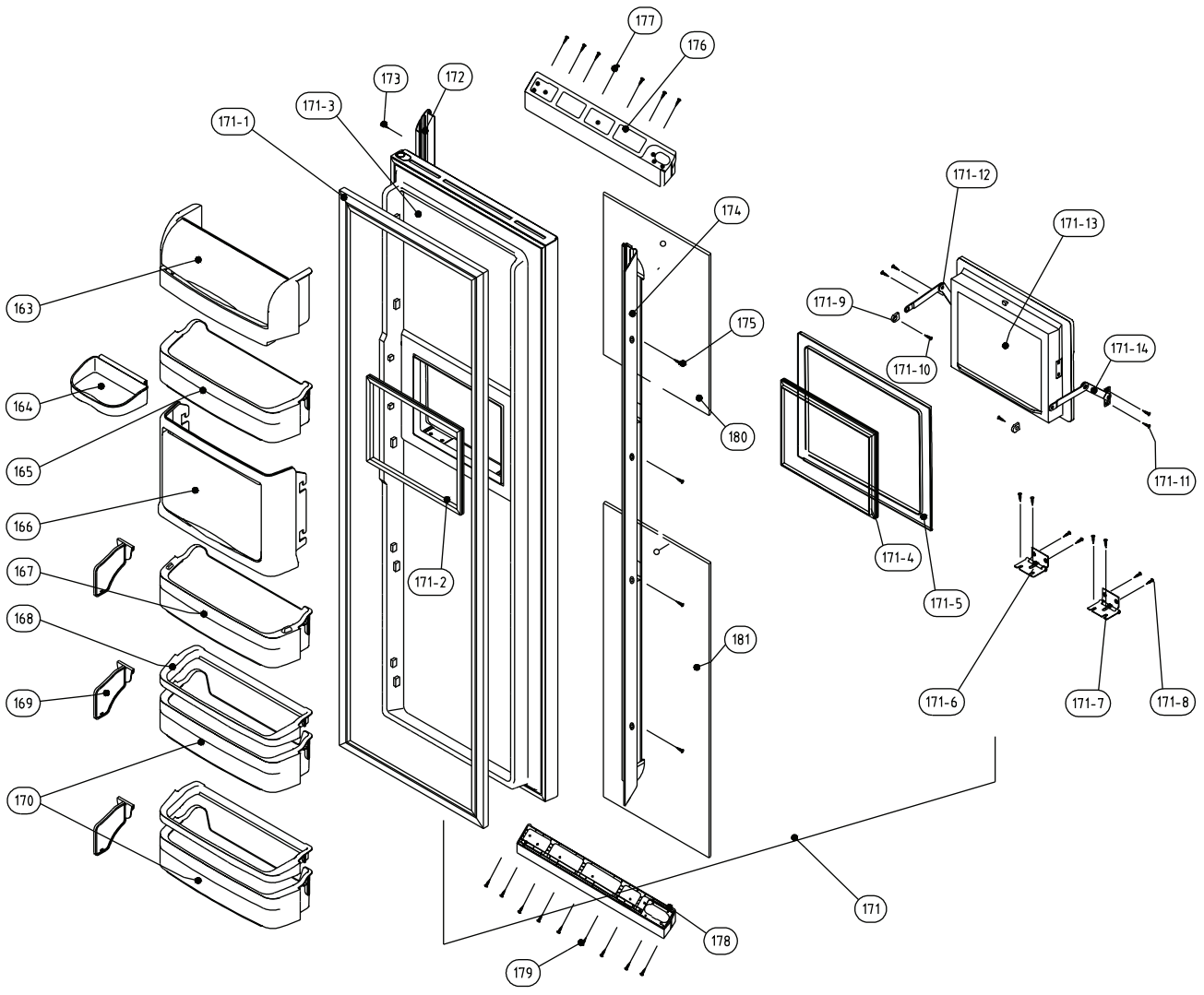

4. FRS-T20FA* Parts List

NO	Part Number	Parts Name	Q'ty	Description
1	3000003600	ASSY CAB URT	1	
2	3012908100	HINGE *T *R AS	1	PO T3.0
3	3012907400	HINGE *T *L AS	1	PO T3.0
4	3016031400	SPECIAL SCREW	2	
6	3011472400	COVER HI *T *R	1	PP
7	3011472300	COVER HI *T *L	1	PP
8	7112401211	SCREW TAPPING	2	T1 TRS 4 x 12 MFZN
9	3012601301	HANDLE CAB COVR *R	1	PP
10	3012601201	HANDLE CAB COVR *L	1	PP
11	7112401211	SCREW TAPPING	1	T1 TRS 4 x 12 MFZN
12	3010533400	BOX MAIN PCB	1	PP
13		**CAPACITOR RUN**	1	
14		**PCB MAIN AS**	1	
15	3011472610	COVER MAIN PCB BOX	1	PP
16	7112401211	SCREW TAPPING	1	T1 TRS 4 x 12 MFZN
17	3013223400	HOSE ICE MAKER TUBE AS	1	
18	3012519200	GUIDE CAB W/TUBE A AS	1	
19	3011485600	COVER GUIDE CAB W/TUBE A	1	HIPS
20	3011202000	CLAMP WATER TUBE A	5	PA-66
21	3012907300	HINGE *U *R AS	1	PO T5.0
22	3012907200	HINGE *U *L AS	1	PO T5.0
25	3016001240	SPECIAL BOLT *T	8	6 x 22 SWCH22A(YL)
26	3015306700	SUPPORTER *U HI AS	2	PO T5.0
27	3012104400	FOOT ADJUST AS	2	
28	3010654500	BRACKET ADJ FOOT AS	2	TURN
29	3016001240	SPECIAL BOLT *T	2	6 x 22 SWCH22A(YL)
30	3012019500	FIXTURE TUBE FIT B	2	PP
31	3013064200	HOLDER TUBE A	1	ACETAL
32	3011433500	COVER CAB BRKT	1	PP
33	3010962400	CAP CAB BRKT COVR	3	NR
34	7142401611	SCREW TAPPING	3	T2 TRS 4 x 16 MFZN
36	3010326701	BASE COMP AS	1	SBHG T1.2
37	3016003300	SPECIAL BOLT	4	T2 M6.5 x 20 4EA

NO	Part Number	Parts Name	Q'ty	Description
38		**CORD POWER AS**	1	
39	7112401211	SCREW TAPPING	1	T1 TRS 4 x 12 MFZN
40	7051401065	SCREW MACHINE	1	PAN 4 x 10 SW BSNI
41		**COMP**	1	
42	3016002500	SPECIAL WASHER	4	SK-5 T0.8
43	3010101600	RUBBER ABSORBER COMP	4	NBR
44-1		**SWITCH P RELAY AS**	1	
44-2	3811402100	COVER RELAY	1	DS3-3NORYL S/S
45	3011113500	CASE VAPORI	1	PP + CTALC
46	3013201700	HOSE DRAIN B	1	PE FRB-5350NT
47	3014413730	PIPE WICON AS	1	
48	3010102100	ABSORBER C MOTR	1	NR FRB-5350NT
49	3012004400	FIXTURE C MOTR	1	SUS
50	3015911500	MOTOR C FAN AS	1	DC12V 2.5W
51	3011802200	FAN	1	ABS (O.D.)3.17 x D110
52	3011200500	CLAMP FAN	1	SUS 304
53	3016806900	DRYER AS	1	XH-9 15g
54	3011474730	COVER MACHROOM AS	1	SBHG T0.4
55	7112401211	SCREW TAPPING	6	T1 TRS 4 x 12 MFZN
56		**VALVE WATER AS**	1	
57	3012007800	FIXTURE MOTOR A	1	PP
58	3015911400	MOTER R FAN AS	1	
59	3012007900	FIXTURE MOTOR B	1	HIPS
60	7122401211	SCREW TAPPING	2	T2S TRS 4 x 12 MFZN
61	3011802200	FAN	1	ABS (O.D.)3.17 x D110
62	3013344200	INSU DAMP B	1	F-PS
63	3013344100	INSU DAMP A	1	F-PS
64	3011471200	COVER DAMP	1	HIPS
65	3018701800	DEO ANTI AS	1	
66	3011471300	COVER DEO	1	ABS
67	3017905300	SOCKET R LAMP AS	2	
68	7121300811	SCREW TAPPING	1	T2 PAN 3X8
69		**LAMP R A**	1	
70	3015507900	WINDOW R LAMP A	1	MIPS

NO	Part Numb er	Parts Name	Q'ty	Description
71	3016002710	SPECIAL SCREW	1	T2S PAN 3X8
73	3017827320	SHELF R A AS	4	FRAME + SHELF + FIXTURE
74	3012514500	GUIDE CASE A *L AS	5	ABS
75	3012514600	GUIDE CASE A *R AS	5	ABS
76	7142401611	SCREW TAPPING	14	T2 TRS 4 x 16 MFZN
77	3011171220	CASE CHILLED AS	1	GPPS + HIPS
79	3018701800	DEO ANTI AS	1	
80	3011472900	COVER RETURN DUCT	1	HIPS
81	3011172020	CASE VEGETB A AS	1	GPPS + HIPS
82	3011473200	COVER VEGETB CASE B	1	GPPS
83	3011172160	CASE VEGETB B AS	1	GPPS + HIPS
84	3017827500	SHELF WINE AS	1	ABS
85	3016002710	SPECIAL SCREW	2	4 x 12
86	3010903200	CAP SCREW	2	PE
87	3018124000	SWITCH LAMP	1	SP201R-7DR
88	3017100500	FLAP MULT DUCT	1	PP
89	3013345000	INSU MULT DUCT AS	1	F-PS
90	3011472750	COVER MULT DUCT	1	HIPS
91	3013408100	KNOB MULT DUCT	1	ABS
92	3017905310	SOCKET R LAMP AS	1	250V 1A
93		**LAMP R B**	1	
94	3015508000	WINDOW R LAMP B	1	MIPS
95	3011473000	COVER SENS	1	ABS
96	3014805400	SENSOR R AS	1	PBN-438
97	3011171330	CASE EGG AS	1	GPPS
98	30140002500	PACKING W/TUBE GUIDE A	2	SILICON
99	3018200801	TANK WATER AS	1	FR-S660CW
100	3012515000	GUIDE DRN AS	1	FR-S660CW
101	7112401211	SCREW TAPPING	1	T1 TRS 4 x 12 MFZN
102	3012007800	FIXTURE MOTOR A	1	PP
103	3015911300	MOTOR F FAN AS	1	DC12V 2.5W
104	3018914400	LOUVER F C	1	PP
105	7142401611	SCREW TAPPING	3	T2 TRS 4 x 16 MFZN
106	3011834500	FAN	1	ABS (O.D.)3.17 x D130

NO	Part Numb er	Parts Name	Q'ty	Description
107	3018914910	LOUVER F D AS	1	PP
109	3018914700	LOUVER F B AS	1	HIPS
109-1	3014805300	SENSOR F AS	1	PT-38
109-2	3011473000	COVER SENSOR	1	ABS
110	3018914630	LOUVER F A AS	1	HIPS
111	7142401611	SCREW TAPPING	3	T2 TRS 4 x 16 MFZN
112	3010924600	CAP F LUVR	3	HIPS
114	3012205800	FRAME ICE MAKER AS	1	FR-S660CW
117	3012517900	GUIDE G/MOTR BRACKET *R	1	ABS
118		BRACKET G/MOTR AS	1	
119	3012517800	GUIDE G/MOTR BRACKET *L	1	ABS
120	3011176230	CASE ICE CRUSHER AS	1	FRS-551F
121	3012517700	GUIDE ICE CRUSHER *R	1	ABS
122	3012520500	GUIDE ICE CRUSHER *L	1	ABS
123	3014559510	PLATE LAMP F	1	SBHG T0.8
124	3017905200	SOCKET F LAMP AS	2	
125		LAMP F	2	
126	7121300811	SCREW TAPPING	4	T2S PAN 3X8 MFZN
127	7112401211	SCREW TAPPING	4	T1 TRS 4 x 12 MFZN
128	3015507710	WINDOW F LAMP	1	MIPS
129	3016002710	SPECIAL SCREW	2	4 x 12
131	3018124000	SWITCH LAMP	1	SP201R-7DR
132	3017827120	SHELF F A AS	3	GLASS + HIPS
133	3011171460	CASE F A AS	1	GPPS + HIPS
134	3011171530	CASE F B AS	1	GPPS + HIPS
135	3019019030	POCKET F *S	1	HIPS
136	3012516000	GUIDE F POCKET	1	PP
137	3019019120	POCKET F	3	HIPS
138		ASSY F DR	1	FR-T660DD
138-1	3010957100	CAP ICE PATH FRAME	1	HIPS
138-2	3012314200	GASKET F DR AS	1	PVC
138-3	3011754100	DOOR F URT AS	1	

NO	Part Number	Parts Name	Q'ty	Description
139	3012604500	HANDLE INTR DR AS	1	AL
140	3016040200	SPECIAL SCREW FRAME	4	4X14 S18C
142	3012201500	FRAME F DR *O	1	AL
143	3016040200	SPECIAL SCREW FRAME	4	4X14 S18C
144	3010930300	CAP F INTR DR *T	1	ABS+SPRAY
145	7142401211	SCREW TAPPING	7	T2 TRS 4X12 MFZN
146	3010930400	CAP F INRT DR *U AS	1	ABS+SPRAY
147	7142401211	SCREW TAPPING	9	T2 TRS 4X12 MFZN
148		**PANEL F DR *T**	1	
149		**PANEL F DR *U**	1	
150	3017905500	SOCKET DISP BOX AS	1	250V 1A
151	3013600020	LAMP DISP	1	AC240V 15W
152	**3011490200**	**COVER DISPNS BOX AS**	**1**	**OTHER COLOR**
	3011490210	**COVER DISPNS BOX AS**	**1**	**BK MIRROR**
152-1	3011437000	COVER DISPNS BOX	1	ABS+SPRAY
152-2	**3015509300**	**WINDOW F PCB AS**	**1**	**OTHER COLOR**
	3015509310	**WINDOW F PCB AS**	**1**	**BK MIRROR**
152-3	30143C4110	PCB *F AS	1	
152-4	3016303400	BUTTON CONTL	8	ABS+AL
152-5	3012307800	GASKET BUTN	1	NR
152-6	7173300811	SCREW TAPPTITE	7	TT2 BIN 3X8 MFZN
153	3010542200	BOX DISPNS ICE SHUT AS	1	
154	3015102200	SPRING ICE D/LEVER	1	Ø0.9 SUS 304
155	3011485900	COVER ICE FLAP AS	1	
156	3012019700	FIXTURE ICE FLAP AS	1	SUS304
157		**VALVE SOL DISP**	1	DISP SN6
158	3018125800	SWITCH MICRO	1	VP333A-2D
159	3012020000	FIXTURE MICRO S/W	1	T0.6 SUS304-3/4H
160	3012208100	FRAME DISPNS BUTN	1	ABS+AL
161	3016303800	BUTTON DISPNS	1	SILICON
162	3012406200	GRILLE DISPNS	1	ABS
163	3019019400	POCKET DAIRY AS	1	POCKET + COVER
164	3019019310	POCKET R *S	1	GP + BLUE
165	3019019830	POCKET R *M	2	HIPS

NO	Part Numb er	Parts Name	Q'ty	Description
166	3011474600	COVER HOMEBAR AS	1	GPPS
167	3019022130	POCKET R *H	1	HIPS
168	3012514100	GUIDE R POKT	2	HIPS
169	3012513400	GUIDE BOTL	3	PP
170	3019019230	POCKET R	2	HIPS
171		ASSY R DR	1	
1 7 1 - 1	3012314500	GASKET R DR AS	1	PVC
1 7 1 - 2	3012314400	GASKET HOMEBAR B AS	1	PVC
1 7 1 - 3	3017754210	DOOR R URT AS	1	
1 7 1 - 4	3012314300	GASKET HOMEBAR A AS	1	PVC
1 7 1 - 5	3011437100	COVER FRAME HOMEBAR	1	ABS+SPRAY
1 7 1 - 6	3012918300	HINGE HOMEBAR *R AS	1	STS304
1 7 1 - 7	3012918200	HINGE HOMEBAR *L AS	1	STS304
1 7 1 - 8	3016030600	SPECIAL SCREW C	8	SUS M5
1 7 1 - 9	3010951500	CAP HOMEBAR ARM PLT *L	2	ABS
171-10	3016030800	SPECIAL SCREW A	2	SUS M5
171-11	3016030600	SPECIAL SCREW C	4	SUS M5
171-12	3014567100	PLATE HOMEBAR ARM *R AS	1	STS 304
171-13	3017754300	DOOR HOMEBAR URT AS	1	
171-14	3014537000	PLATE HOMEBAR ARM *L AS	1	STS 304
172	3012201800	FRAME R DR *O	1	AL
173	3016040200	SPECIAL SCREW FRAME	4	4X14 S18C
174	3012604500	HANDLE INTR DR AS	1	AL
175	3016040200	SPECIAL SCREW FRAME	4	4X14 S18C
176	3010930500	CAP R INTR DR *T	1	ABS+SPRAY
177	7142401211	SCREW TAPPING	7	T2 TRS 4X12 MFZN
178	3010930600	CAP R INTR DR *U AS	1	ABS+SPRAY
179	7142401211	SCREW TAPPING	7	T2 TRS 4X12 MFZN
180		PANEL R DR *T	1	
181		PANEL R DR *U	1	
190	3014805200	SENSOR D AS	1	PBN-43
191		EVA AS	1	
192		FUSE TEMP AS	1	
193		HEATER D AS	1	